TÖÖRÖ module
User and service Manual

Revision 1.0 EN - 24/03/2021
for Firmware V1.20 - 08/03/2021

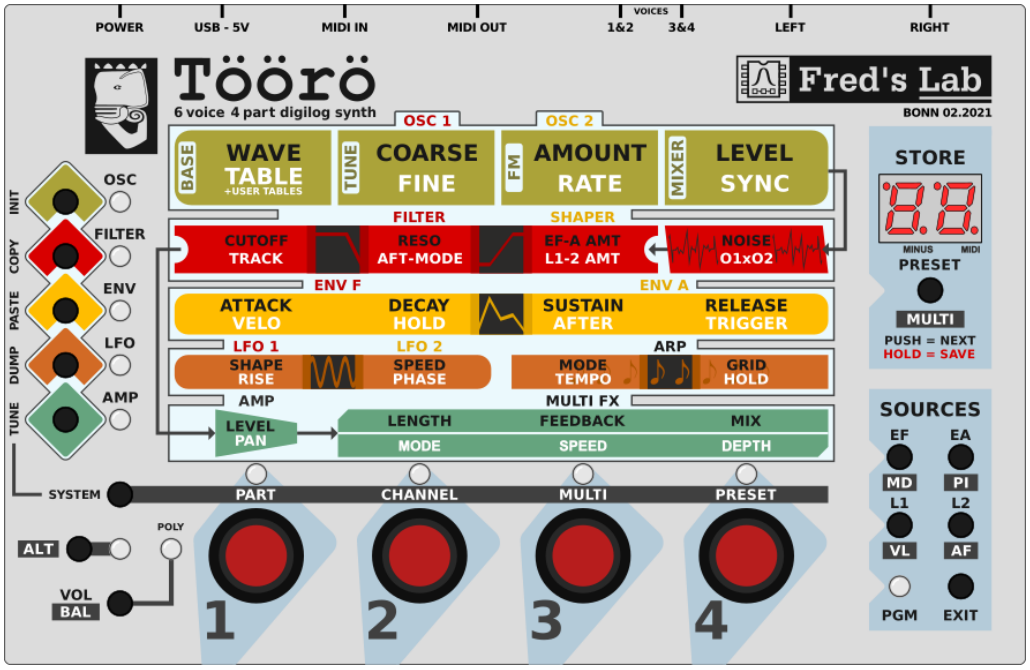

Frédéric Meslin / Fred's Lab

March 29, 2021

Introduction

Thank you very much for purchasing the Töörö!

This is the second multitimbral synthesizer from Fred's Lab and our best attempt at hybrid polyphonic synthesis.

By carefully blending analog and digital technologies, mixing 1970's and 2020's electronics and pouring it in a compact and rugged package, the Töörö was born.

With its 6 characterful voices, the wild FL A847 filters and an advanced delay on board, the Töörö has high sonic potential, just release it and create!

Love from Germany

Fred, from Fred's Lab

Legal notices

Fred's Lab cannot be liable for erroneous information contained in this manual. The contents of this manual may be updated at any time without prior notice. We have put best effort to ensure the information provided here is useful and accurate. Fred's Lab extends no liabilities in regard to this manual other than those required by the local laws.

Frédéric Meslin Audiogeräte
Herwarthstraße, 20
53115 Bonn, Germany
info@fredslab.net
http://fredslab.net

Support requests
For support requests, you can reach me per e-mail at:

support@fredslab.net

or per post, using the previously mentioned company address.

For each support request, please include the instrument model, serial number and a precise description of the problem encountered with a maximum of details and supporting elements for a quick resolution.

Copyright information

This original manual, its content, including the graphics & descriptions are the property of **Fred's Lab**. No part of this manual should be reproduced other than for customer personal use and backup needs without a written permission from **Fred's Lab**.

Warranty

Fred's Lab warranty this product free of defects **3 years** from its date of purchase.

This warranty covers product from manufacturing defects, when the product is used observing normal operating conditions. However, the warranty **does not cover**:

- Normal product wear-out
- Damages caused by failure to observe the rules of use
- Damages due to negligence of the user
- Products having been modified or repaired by the user or a third person

More information about product warranty can be found in the **General Terms and Conditions of Sale document** available at:

https://fredslab.net/en/terms.html

Special Thanks

I would like to thank the following persons for their contributions to this project:

- Panel and logo designs: Serge Beauchamp
- Kickstarter communication / Press kit: Alex Theakston
- Factory sounds: Espen Kraft
- Quality insurance: Benoit Ruelle, René Schmidt, Pierre Studievic, Mathieu Meslin, Thomas Billiou, Oliver Rockstedt
- User manual: Oliver Rockstedt, Fanny Homberger (DE)
- Audio demos: Laurent Pelletier, Fabien Labonde

And Fanny & Neal Homberger for their continuous support and their regular contributions.

This project has been made possible through the financial support from the Kickstarter Backers.

Precautions

Before plugging in the **Töörö!** and go **rocking the World**, have a sit and read this precautions through:

- Always use the device in a dry and warm environment
- Never drop the device or expose to too much pressure or vibration
- Never spill liquids or bath the device in beer
- Never clean the device with an aggressive solvent
- Only use certified USB power adapters to power the device
- Never wiggle the plugs to disconnect the cords
- Never connect the line outputs to the power outputs of an amplifier
- Only modify the unit at your own risk!

The Töörö! used in conjunction with headphones and speaker systems can produce **very loud sounds** in a wide range of frequencies.

Human hearing is **very sensitive** and can be damaged quickly. So watch out your hears and those of your audience!

Contents

1 Presentation **9**
1.1 What is MIDI? . . . 9
1.2 Remarks on polyphony . . . 9

2 Requirements **9**
2.1 An audio system . . . 9
2.2 A MIDI controller . . . 10
2.3 A USB power source . . . 10
2.4 Remarks on USB noise . . . 10

3 Instrument Setup **11**

4 Instrument Operation **12**
4.1 Connectors . . . 12
4.2 Controls & Indicators . . . 13
4.3 Editing Parameters . . . 14
4.3.1 Parameter LEDs . . . 14
4.3.2 Parameter Display . . . 14

5 Preset & Multi Management **15**
5.1 Selecting a Part . . . 15
5.2 Setting the MIDI Channel . . . 15
5.3 Selecting a Preset . . . 15
5.4 Saving a Preset . . . 16
5.4.1 Overwriting the Current Preset . . . 16
5.4.2 Saving a Preset to a Different Memory Location . . . 16
5.5 Copying Presets . . . 16
5.6 Initializing a Preset . . . 16
5.7 Dumping a Preset via Sysex . . . 16
5.8 Selecting a Multi . . . 17
5.9 Saving a Multi . . . 17
5.9.1 Overwriting the Current Multi . . . 17
5.9.2 Saving a Multi to a Different Memory Location . . . 17
5.10 Copying Multis . . . 18
5.11 Initializing a Multi . . . 18
5.12 Dumping a Multi via Sysex . . . 18

6 Preset Parameters **19**
6.1 Overview . . . 19
6.2 Voice Mode . . . 19
6.3 Oscillators . . . 20
6.3.1 Wave . . . 20
6.3.2 Table . . . 20
6.3.3 Coarse Tune . . . 21
6.3.4 Fine Tune . . . 21
6.3.5 FM Amount . . . 22
6.3.6 FM Rate . . . 22
6.3.7 Level . . . 22

6.3.8 Sync . . . 22
6.4 Extra . . . 23
6.4.1 Noise Level . . . 23
6.4.2 Ringmodulator Level . . . 23
6.5 Filter . . . 24
6.5.1 Cutoff . . . 24
6.5.2 Resonance . . . 24
6.5.3 Env F Amount . . . 24
6.5.4 LFO 1 Amount . . . 24
6.5.5 Pitch Tracking . . . 25
6.5.6 Aftertouch Amount . . . 25
6.6 Shaper . . . 26
6.6.1 Cutoff Frequency . . . 26
6.6.2 Resonance . . . 26
6.6.3 Env A Amount . . . 26
6.6.4 LFO 2 Amount . . . 26
6.6.5 Pitch Tracking . . . 27
6.6.6 Mode . . . 27
6.7 LFOs . . . 28
6.7.1 Shape . . . 28
6.7.2 Speed . . . 28
6.7.3 Rise . . . 29
6.7.4 Phase . . . 29
6.8 Envelopes . . . 30
6.8.1 Attack Time . . . 30
6.8.2 Decay Time . . . 30
6.8.3 Sustain Level . . . 30
6.8.4 Release Time . . . 31
6.8.5 Velocity Amount . . . 31
6.8.6 Hold Time . . . 31
6.8.7 Aftertouch Amount . . . 31
6.8.8 Trigger Mode . . . 31
6.9 Amplifier . . . 32
6.9.1 Level . . . 32
6.9.2 Pan . . . 32
6.10 Arpeggiator . . . 33
6.10.1 Mode . . . 33
6.10.2 Grid . . . 33
6.10.3 Tempo . . . 34
6.10.4 Hold . . . 34
6.11 Modulation Matrix . . . 35
6.11.1 Entering the Matrix Programming Mode . . . 35
6.11.2 Programming a Modulation Assignment . . . 35
6.11.3 Replacing a Modulation Assignment . . . 35
6.11.4 Clearing a Modulation Assignment . . . 35
6.11.5 Exiting the Matrix Programming Mode . . . 35
6.11.6 Modulation Sources . . . 36
6.11.7 Modulation Destinations . . . 36
6.11.8 Default Assignments . . . 36

6.11.9 Example 1: Applying LFO 1 Modulation on Osc 1 Pitch 37
6.11.10 Example 2: Applying Pitch Modulation on Amplifier Pan 37

7 Multi Parameters 38
7.1 Overview 38
7.2 Parts Mixer 38
7.3 Multi FX 39
7.3.1 Length 39
7.3.2 Feedback 39
7.3.3 Mix 39
7.3.4 Mode 39
7.3.5 Speed 40
7.3.6 Depth 40

8 Filter Tuning 41

9 Firmware Update 41

10 Specifications 42
10.1 Sound Engine 42
10.1.1 General 42
10.1.2 Oscillators 42
10.1.3 Filter 42
10.1.4 Shaper 42
10.1.5 Envelopes 42
10.1.6 LFOs 42
10.1.7 Arpeggiator 42
10.1.8 DCA 43
10.1.9 Multi FX 43
10.2 Memory 43
10.3 Line Outputs 43
10.4 Audio Resolution 43
10.5 Master Clocks 43
10.6 Power 43
10.7 Connectors 43
10.8 User Interface 44
10.9 Dimensions & Weight 44
10.10 Mechanics 44
10.11 Accessories 44

11 MIDI Implementation 45
11.1 Channel Voice Messages 45
11.1.1 Note Off 45
11.1.2 Note On 45
11.1.3 Polyphonic Aftertouch 45
11.1.4 Controller Change 45
11.1.5 Program Change 46
11.1.6 Channel Aftertouch 46
11.1.7 Pitch Bend 46

11.2 System Real Time Messages . . . 46
11.2.1 Clock Start . . . 46
11.2.2 Clock Continue . . . 46
11.2.3 Clock Stop . . . 47
11.2.4 Clock Tick . . . 47
11.2.5 Active Sensing . . . 47
11.3 MIDI CC Assignments . . . 48

12 Sysex Implementation **50**
12.1 Requests . . . 50
12.1.1 Multi Request . . . 50
12.1.2 Preset Request . . . 50
12.2 Dumps . . . 50
12.2.1 Multi Dump . . . 50
12.2.2 Preset Dump . . . 51
12.2.3 Data Packing . . . 54

13 Schematics **55**

14 Norms **65**
14.1 Europe: CE . . . 65
14.2 Canada: Interference Regulation . . . 66
14.3 USA: FCC Information . . . 66

1 Presentation

The **Töörö** is a 6-voice polyphonic, 4-part multi-timbral, hybrid "digilog" MIDI sound module.

- **Polyphonic** means it can play several notes at the same time.
- **Multi-timbral** means it can play several instruments at the same time.
- **Digilog** means the sound is created using audio algorithms and then converted into the analog domain for further processing.
- **MIDI sound module** means it needs a MIDI controller to generate sound.

1.1 What is MIDI?

MIDI stands for **Musical Instrument Digital Interface**.

It is a technical standard allowing music instruments to communicate and be used in concerto. It defines a protocol, messages, a digital interface and cables / connectors formats. A MIDI connection carries notes, controller changes, clocks and various configuration data.

The **Töörö** is a hybrid instrument. It initially computes the sounds using mathematical models and algorithms, executed by a powerful ARM micro-processor, which are then converted into analog domain and shaped by an **FL A847** low-pass filter.

1.2 Remarks on polyphony

The 6-voice polyphony is the **absolute maximal** number of notes that can be played at the same time. If you try to play more notes simultaneously, the older voices will be muted and reused for newer notes. This mechanism is called "voice-stealing" and will result in audio artifacts or parts of your music not being played when triggered. In order to avoid it, keep in mind the module limitations while composing your music.

2 Requirements

To play with the **Töörö** you need:

- **An audio system** with line-level inputs
- **A MIDI controller**, a sequencer or a computer
- **A USB power source**

2.1 An audio system

can be a HiFi stereo system, a power mixing desk connected to speakers or a pair of active speakers.

2.2 A MIDI controller

can be any master keyboard, wind controller, surface... that sends MIDI notes. You can also attach the instrument to a hardware or software MIDI sequencer. It can run on a computer, a laptop or a tablet/smartphone. You may need a dedicated external MIDI interface or just use the USB connection.

2.3 A USB power source

can be a USB host, a power bank or a USB wall adapter/charger. Never use cheap USB chargers that can be very noisy.

2.4 Remarks on USB noise

If you keep hearing irritating hum and noise when the **Töörö** is connected via USB, you may experience a **USB ground loop problem**. Fortunately, there are several solutions to overcome this problem.

Solution 1:

- Use another USB power source (power bank or wall adapter)
- Connect the instrument to the computer with a MIDI DIN cable

Solution 2:

- Use a **USB galvanic isolator**

Example: Olimex USB-ISO module
https://www.olimex.com/Products/USB-Modules/USB-ISO

MIDI DIN connections are, by design, prevented from ground loop problems. It is the preferred solution to avoid these annoying issues.

3 Instrument Setup

Step 1: Audio

Connect the **Töörö** line-level outputs (left & right) to your audio system inputs using two 6.35mm unbalanced jacks.

Step 2: MIDI

Connect the **Töörö** MIDI DIN input (MIDI IN) to your MIDI compatible controller or sequencer/computer using a MIDI DIN cable.

or

Connect the USB port (USB - 5V) to your computer, laptop, tablet or smartphone.

Step 3: Power

If not already done in the previous step, connect the **Töörö** power input (USB - 5V) to your power source of choice.

Press the power switch on the rear panel to power up the **Töörö**.

Step 4: Audio system

Switch on you audio system, adjust the volume and play some notes!

4 Instrument Operation

Once the instrument is properly installed and you can hear some sounds when playing notes, let's have a good look at its panel:

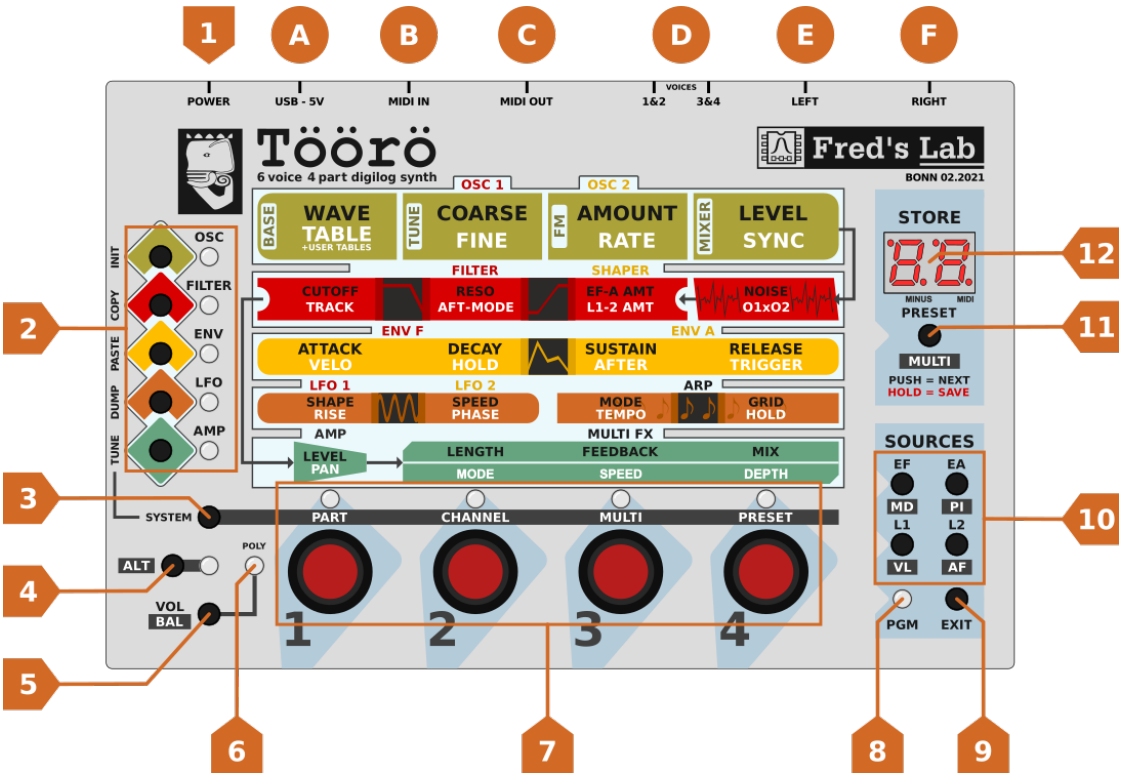

4.1 Connectors

(A) USB - 5V

This is the USB-B connector for both power and MIDI over USB function. It must be attached to a source to power up the **Töörö**.

(B) MIDI IN

This is the MIDI DIN input connector for a MIDI compatible controller or sequencer. It should be attached to a MIDI DIN output connector of an other device.

(C) MIDI OUT

This is the MIDI DIN output connector to be connected to a sequencer, computer or subsequent machines. All incoming messages that are not parsed by the **Töörö** are forwarded to this output.

(D) VOICES 1&2 / 3&4

These are separate TRS jacks hardwired to voices 1-4 for individual processing. Signal of voices 1/3 will appear on the tip, voices 2/4 on the ring of the connector. Note that the voices are not cut from the main outputs when a cable is plugged in.

(E) (F) LEFT & RIGHT

These are the main outputs to be connected to a mixing desk, audio interface of power speaker system.

4.2 Controls & Indicators

(1) Power Switch

Switches the power on or off.

(2) Module Buttons & LEDs

Selects the module edited by the parameter encoders. Pressing the same buttons several times cycles through all available modules of a section. The LED color shows which module is currently selected corresponding to the panel labeling.

(3) SYSTEM Button

Allows access to the advanced functions. This button is used in conjunction with the parameter encoders and the module buttons.

(4) ALT Button & LED

Used to access the alternate functions and synthesis parameters labelled in inverse printing. Pressing this button toggles between normal and alternate mode. Alternate mode is indicated with the LED lit.

(5) VOL/BAL Button

Holding this button while turning one of the encoders sets the volume or balance for a part. In normal mode, volume is set. To set the balance, enable the alternate mode via the **ALT** button.

(6) POLY LED

If lit, the currently selected part is in polyphonic mode. Otherwise, the part is set to monophonic mode. Double-click the **VOL/BAL** button to toggle the mode.

(7) Parameter Encoders & LEDs

Changes the value of sound or system parameters.

(8) PGM LED

Indicates if modulation matrix programming mode is enabled.

(9) EXIT Button

Exits matrix programming mode and returns to normal operation. Also, holding the **EXIT** button and pressing the **PRESET** button reloads the currently saved preset / multi (depending on **ALT**), discarding all modifications made.

(10) Sources Buttons

Enters matrix programming mode and selects the source to modulate a sound parameter. If alternate mode is enabled via the **ALT** button, a second set of sources can be selected and assigned.

(11) PRESET/MULTI Button

Loads and saves presets and multis. Pressing the button momentary, loads the next preset. Holding the button down for more than one second will save the current preset or multi with all its modifications.

(12) 7-segment Display

Shows the current preset or multi number. While editing a parameter, the display will show its current value for some time. To indicate negative parameter values, the dot after the first digit will be lit. Also, when MIDI data is received, the dot after the second digit will flash. When selecting a module for editing, the display will briefly indicate which module is edited.

4.3 Editing Parameters

To edit parameters, use the 4 encoders at the bottom row of the **Töörö**. Which parameters are currently edited, depends on the selection of the module via the **module buttons**, if alternate mode is enabled via the **ALT** button or the **SYSTEM** button is held down.

4.3.1 Parameter LEDs

The LEDs above the encoders give a rough idea about the parameters value by showing different colors and brightness:

- When a parameter is set to 0, the LED is off.
- Unipolar parameters start with yellow for smaller values, blending into red on higher values.
- On bipolar parameters, negative values are shown in green, positive values are shown in red.

Color blind users should instead rely on the values shown on the display when turning the encoders.

4.3.2 Parameter Display

Whenever a parameter is changed via an encoder, the display shows its current value for a short time and then changes back to the preset or multi number.
To show the values in full resolution on the 2-digit display, most numeric parameters of the Töörö are shown as hexadecimal values. Negative values are indicated by a dot after the first digit.

Hex: -0x2A
Decimal: -42

Hex: 0x43
Decimal: 67

5 Preset & Multi Management

The **Töörö** is a multi-timbral device that can store 100 presets and 10 multis. All memory locations can be overwritten by the user, so the factory patches can be overwritten.

An important concept to understand is that there is no separation between preset and multi mode, the **Töörö** always operates in multi mode.

- A preset is a single sound with a set of parameters for oscillators, filter, shaper, LFOs, envelopes, amplifier, arpeggiator and modulation matrix.
- For operations on presets, the alternate mode must be disabled. Make sure that the **ALT** LED is not lit.
- A multi is a set that references 4 presets as parts, a mixer with volume and balance, the MIDI channel settings and an fx section.
- For operations on multis, the alternate mode must be enabled. Make sure that the **ALT** LED is lit.

5.1 Selecting a Part

Before selecting or editing a preset, it is important to select the part currently edited. By default, part 1 is selected.

Press and hold the **SYSTEM** button. Then use the first parameter encoder labelled **PART** to select the part. The display will show **P1..P4** while the encoder is turned.

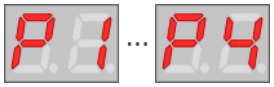

Part selection 1..4

5.2 Setting the MIDI Channel

You can set a separate MIDI channel for each part to receive notes and other messages from an external keyboard, computer or sequencer. In addition, **omni mode** can be selected to receive MIDI data from all channels.

Press and hold the **SYSTEM** button. Then use the second parameter encoder labelled **CHANNEL** to select the midi channel. The display will show **01..16** or **OM** while the encoder is turned.

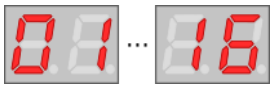

Channel 1..16

Omni mode

Note: when omni mode is selected, channel 1 is used to transmit parameter changes.

5.3 Selecting a Preset

There are 2 ways to select a preset:

- Press the **PRESET** button to increment the preset number by one.

- Press and hold the **SYSTEM** button. Then use the fourth parameter encoder labelled **PRESET** to increment or decrement the preset number.

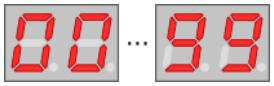

Preset selection 0..99

5.4 Saving a Preset

5.4.1 Overwriting the Current Preset

To save an edited preset onto the current memory location, press and hold down the **PRESET** button until the display starts to blink. When the button is released, the preset will be saved, replacing the data stored previously.

5.4.2 Saving a Preset to a Different Memory Location

Saving a preset to a different location can be done by copy & paste utilizing a temporary buffer.

- Press and hold the **SYSTEM** button. Then press the **Module button** labelled **FILTER**. This button also has a secondary vertical label **COPY** left to it.
- The preset is now stored inside a temporary buffer.
- Select the destination preset to be overwritten as described above under *Selecting a Preset*.
- Press and hold the **SYSTEM** button. Then press the **Module button** labelled **ENV**. This button also has a secondary vertical label **PASTE** left to it.
- The preset previously stored in the temporary buffer is now recalled.
- Press and hold down the **PRESET** button until the display starts to blink. When the button is released, the preset will be saved.

5.5 Copying Presets

Presets can be copied to another location via copy & paste in a similar way as described above under *Saving a Preset to a Different Memory Location*.

5.6 Initializing a Preset

To initialize a preset, press and hold the **SYSTEM** button and then press the **Module button** labelled **OSC**. This button also has a secondary vertical label **INIT** left to it. Initializing resets all sound parameters to their default values.

5.7 Dumping a Preset via Sysex

Preset data can only be dumped over USB MIDI to be stored on an external computer or sequencer.

To dump a preset over USB MIDI, press and hold the **SYSTEM** button and then press the **Module button** labelled **LFO**. This button also has a secondary vertical label **DUMP** left to it.

You can dump back a preset from your computer or sequencer at any time. The **Töörö** will process any received dump without any prerequisites.

5.8 Selecting a Multi

There are 2 ways to select a multi:

- When alternate mode is selected via the **ALT** button, the multis can be cycled through by pressing the **PRESET** button repeatedly.
- Press and hold the **SYSTEM** button. Then use the third parameter encoder labelled **MULTI** to increment or decrement the multi number.

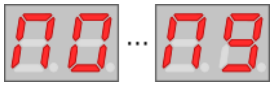

Multi selection M0..M9

5.9 Saving a Multi

First, make sure that alternate mode is enabled via the **ALT** button.

5.9.1 Overwriting the Current Multi

To save a multi onto the current memory location, press and hold down the **PRESET** button until the display starts to blink. When the button is released, the multi will be saved, replacing the data stored previously.

5.9.2 Saving a Multi to a Different Memory Location

Saving a multi to a different location can be done by copy & paste utilizing a temporary buffer.

- Press and hold the **SYSTEM** button. Then press the **Module button** labelled **FILTER**. This button also has a secondary vertical label **COPY** left to it.
- The multi is now stored inside a temporary buffer.
- Select the destination multi to be overwritten as described above under *Selecting a Multi*.
- Press and hold the **SYSTEM** button. Then press the **Module button** labelled **ENV**. This button also has a secondary vertical label **PASTE** left to it.
- The multi previously stored in the temporary buffer is now recalled.
- Press and hold down the **PRESET** button until the display starts to blink. When the button is released, the multi will be saved.

5.10 Copying Multis

Multis can be copied to another location via copy & paste in a similar way as described above under *Saving a Multi to a Different Memory Location.*

5.11 Initializing a Multi

To initialize a multi, while in alternate mode, press and hold the **SYSTEM** button and then press the **Module button** labelled **OSC**. This button also has a secondary vertical label **INIT** left to it. Initializing resets all multi parameters to its default values.

- Part 1 will be set to preset **00** on MIDI channel 1.
- Part 2 will be set to preset **01** on MIDI channel 2.
- Part 3 will be set to preset **02** on MIDI channel 3.
- Part 4 will be set to preset **03** on MIDI channel 4.
- Volume is set to maximum for all parts.
- Balance is set to center for all parts.
- The FX mix level is set to minimum / disabled

5.12 Dumping a Multi via Sysex

Multi data can be dumped over USB MIDI to be stored on an external computer or sequencer.

To dump a multi over USB MIDI, while in alternate mode, press and hold the **SYSTEM** button and then press the **Module button** labelled **LFO**. This button also has a secondary vertical label **DUMP** left to it.

You can dump back a multi from your computer or sequencer at any time. The **Töörö** will process any received dump without any prerequisites.

Important: keep in mind that multi data does not contain any information about the sound parameters. You have to transfer these separately via preset dumps.

6 Preset Parameters

6.1 Overview

Töörö overall preset structure

PRESET

- NAME — *Name of the Preset in 32 ASCII characters*
- TUNE — *Master tuning in cents*
- BENDRANGE — *Pitch bend range in semitones*
- USERTABLE — *Wave references for user tables 1 & 2*

OSC

- WAVE — *Position in the wave table from 0 to 4*
- TABLE — *Wave table selection T1-T8, user, random per note, random per chord*
- COARSE — *Coarse pitch tuning -36 to +36 semitones*
- FINE — *Fine pitch tuning -100 to +100 cents*
- FM AMOUNT — *Amount of phase modulation from the FM operator*
- FM RATE — *Rate of the FM operator based on oscillator pitch*
- LEVEL — *Oscillator output level*
- SYNC — *Time scaling of waveforms*

FILTER

- CUTOFF — *Cutoff frequency of LP filter*
- TRACK — *Pitch tracking of the cutoff*
- RESO — *Amount of resonance*
- AFTERTOUCH — *Influence of MIDI aftertouch*
- ENV. F AMOUNT — *Influence of filter envelope*
- LFO 1 AMOUNT — *Influence of LFO1 on cutoff*

SHAPER

- CUTOFF — *Cutoff or center frequency*
- TRACK — *Pitch tracking of the cutoff*
- RESO — *Q or gain amount*
- MODE — *Shaper mode, LP, BP & HP*
- ENV. A AMOUNT — *Influence of amp envelope*
- LFO 2 AMOUNT — *Influence of LFO2 on cutoff*

EXTRA

- NOISE — *White noise level*
- O1xO2 — *Amount of ring modulation*

ENV F&A

- ATTACK TIME — *Time for env. to rise*
- VELOCITY — *Effect of velocity*
- DECAY TIME — *Time for env. to decay*
- HOLD TIME — *Hold time after attack phase*
- SUSTAIN LEVEL — *Envelope sustain level*
- AFTERTOUCH — *Effect of aftertouch*
- RELEASE TIME — *Time for env. to release*
- TRIGGER MODE — *Always, never, continue*

LFO 1&2

- SHAPE — *Triangle, saw-up, saw-down, square, MW, random, filtered random, LFO1 x LFO2*
- SPEED — *Oscillation rate of the LFO*
- RISE — *Oscillation level rising time*
- PHASE — *Free, random, 0, 90, 180, 270*

ARP

- MODE — *off, up, down, random, upx, downx modes*
- DIVISION — *48, 32, 24, 16, 12, 8, 6, 3, 2, 1 MIDI ticks*
- TEMPO — *Internal tempo 64 - 320 bpm*
- HOLD — *on / off*

AMP

- LEVEL — *Sound overall level*
- PAN — *Sound stereo panning*

MOD. MATRIX

- EF AMOUNT — *Amount of filter envelope*
- EF TARGET — *Parameter being modulated*
- EA AMOUNT — *Amount of amplifier envelope*
- EA TARGET — *Parameter being modulated*
- L1 AMOUNT — *Amount of LFO1*
- L1 TARGET — *Parameter being modulated*
- L2 AMOUNT — *Amount of LFO2*
- L2 TARGET — *Parameter being modulated*
- WHEEL AMOUNT — *Amount of MIDI mod. wheel*
- WHEEL TARGET — *Parameter being modulated*
- PITCH AMOUNT — *Amount of MIDI pitch*
- PITCH TARGET — *Parameter being modulated*
- VELO AMOUNT — *Amount of MIDI velocity*
- VELO TARGET — *Parameter being modulated*
- AFTER AMOUNT — *Amount of MIDI aftertouch*
- AFTER TARGET — *Parameter being modulated*

Notes:

- The preset name is only accessible by Sysex messages.
- The **Tune** and **Band Range** parameters are only accessible via Sysex and MIDI CC messages.

6.2 Voice Mode

Each preset of the **Töörö** can be played in monophonic or polyphonic mode. To toggle the mode, double-click the **VOL/BAL** button. If polyphonic mode is selected, the **POLY** LED is lit.

In monophonic mode, each part is played by a single dedicated voice. The voice number corresponds to the part number, e.g. part 1 uses voice 1, part 2 uses voice 2 etc. This way, each part appears as a separate signal at the **Voices Outputs**, so it can be processed and mixed individually.

In monophonic mode, note priority is "last played" for new notes, and "highest" for re-triggered notes.

6.3 Oscillators

The **Töörö** has two identical wavetable oscillators that build the heart of the sound engine. Each oscillator generates a blended waveform that is determined by the content of the selected wavetable. In addition, FM modulation and auto-sync is possible within a single oscillator to produce alterations of the harmonic content.

To access the oscillators parameters, press the **OSC** module button. If you press the button more than once, the selection will cycle between Osc 1 and Osc 2. The LED color indicates which oscillator is selected:

Osc 1 Osc 2

In addition, the display will show the selected oscillator briefly:

Osc 1

Osc 2

In normal mode, the **Wave, Coarse Tune, FM Amount** and **Level** parameters can be edited via the first and second encoder. To edit the **Table, Fine Tune, FM Rate** and **Sync** parameters, alternate mode has to be enabled via the **ALT** button.

6.3.1 Wave

Sets the play position inside the selected wavetable. You can modulate this parameter via the modulation matrix in order to bring movement into your sound.

6.3.2 Table

This parameter selects the wavetable that is used by the oscillator. In conjunction with the **Wave** setting, it is the most important control to define the basic tone.

Each wavetable consists of a combination of 4 waveforms that are blended to create a smooth transition. The following 16 waveforms are available to build these combinations:

- Sawtooth
- Square
- Triangle
- Sine
- Blue Noise
- Brown Noise
- Metal overtones
- Bell like
- Double Saw
- Double Square
- Organ,
- Prime numbers
- Formant A
- Formant E
- Formant O
- Grin

There are 8 factory wavetables and one user wavetable to choose from:

t1	Basic	Sawtooth → Square → Triangle → Sine
t2	Bright	Blue Noise → Brown Noise → Metal Overtones → Bell-like
t3	Full	Double Saw → Double Square → Organ → Prime Numbers
t4	Formants	Formant A → Formant E → Formant O → Grin
t5	Mix 1	Sawtooth → Organ → Bell-like → Formant E
t6	Mix 2	Triangle → Grin → Sine → Blue Noise
t7	Mix 3	Formant A → Brown Noise → Formant O → Prime Numbers
t8	Mix 4	Metal Overtones → Double Square → Bell-like → Double Saw
tU	User	Free combination of waveforms
rn	Random per Note	Random combination generated on each played note
rC	Random per Chord	Random combination generated on each played chord

Each oscillator has its own user table. It is initialized with the content of *Basic* for **Osc 1** and *Bright* for **Osc 2**.

There are two ways to change the content of the user wavetable:

- By sending a sysex command that configures the entries.
- By selecting the *Random per note* or *Random per Chord* wavetable and switch back to the *User* setting. Doing so will keep the last randomly generated combination. You can repeat this method several times until you are satisfied with the result.

6.3.3 Coarse Tune

Sets the pitch of the oscillator in semitones within a +/-3 octave range.

6.3.4 Fine Tune

Sets the fine pitch of the oscillator. It covers a range of +/-100 cents of a semitone.

6.3.5 FM Amount

The FM feature offers a phase modulation that uses the selected wave as carrier and a sine wave as modulator. This parameter sets the amount of modulation that is applied to the carrier.

6.3.6 FM Rate

Sets the frequency of the modulator sine wave for the phase modulation. The frequency is based on note pitch, using the following ratios:

- For negative values: *freq / (1 - rate / 16)*
- For positive values: *freq * rate / 4*

6.3.7 Level

Sets the mix level of the oscillator's output.

6.3.8 Sync

This parameter sets the auto-sync feature. It sounds like hard-sync and works by shorting and scaling the waveform, while keeping the note original pitch. A range of 1 to 15 waveform cycles can be set for the sync feature.

6.4 Extra

This module offers two additional signal sources that can be mixed with the oscillators before being routed to the shaper.

To access the extra parameters, press the **FILTER** module button. If you press the button more than once, the selection will cycle between filter and shaper. The extra module's parameters are accessible in both cases.

In normal mode, the **Noise Level** can be edited via the fourth encoder. To edit the **Ringmodulator Level**, alternate mode has to be enabled via the **ALT** button.

6.4.1 Noise Level

Sets the mix level of the white noise generator's output.

6.4.2 Ringmodulator Level

Sets the mix level of the ring modulator. The ring modulator multiplies the output of the two oscillators and generates a signal that contains the sum and the difference of the source signals. You can use this to get metallic timbres.

6.5 Filter

This module is one of the main sound-shaping components of the **Töörö** and is built upon a discret analog design, the FL A847 optocoupled resonant filter. It offers a 12db/octave low-pass with a unique sound.

To access the filter parameters, press the **FILTER** module button. If you press the button more than once, the selection will cycle between filter and shaper. The LED color indicates which module is selected:

Filter Shaper

In addition, the display will show the selected module briefly:

Filter

Shaper

Make sure that the filter module is selected.

In normal mode, the **Cutoff, Resonance** and **Env F Amount** parameters can be edited via the first, second and third encoder. To edit the **Pitch Tracking, Aftertouch Amount** and **LFO 1 Amount** parameters, alternate mode has to be enabled via the **ALT** button.

6.5.1 Cutoff

The cutoff frequency sets the point at which the signal is split into two bands. Frequencies below that point will remain unaffected, while frequencies above will be attenuated progressively.

6.5.2 Resonance

In a resonant filter, frequencies around the cutoff point can be emphasized. This is what this parameter is for. The more the value is increased, the more the sound will get a nasal character that will turn into a ringing at higher settings. When fully raised, the filter will run into self-oscillation, producing a tone with a pitch tuned to the cutoff frequency.

6.5.3 Env F Amount

Determines how much the filter envelope (Env F) affects the cutoff frequency. Use this to shape the harmonic content over time in order to make your sound feel more alive.

6.5.4 LFO 1 Amount

Sets the amount of LFO 1 modulation on the cutoff frequency.

6.5.5 Pitch Tracking

This parameter allows the cutoff frequency to follow the pitch of the played notes. The effective pitch is calculated from the note number but also includes any modulation via the pitch wheel. The reference note number where modulation is unaffected is 36. The range of this parameter reaches from -200% to +200%. A setting of *10* in the display corresponds to a tracking of +100%, making the cutoff frequency follow the notes on the keyboard.

6.5.6 Aftertouch Amount

Sets the amount of modulation that is applied by the keyboard aftertouch.

6.6 Shaper

The shaper is a module located right after the mixer stage and allows additional processing before the signal is routed to the analog filter. It offers a multimode filter that can be configured as low-pass, band-pass or high-pass.

To access the shaper parameters, press the **FILTER** module button. If you press the button more than once, the selection will cycle between filter and shaper. The LED color indicates which module is selected:

Filter Shaper

In addition, the display will show the selected module briefly:

Filter

Shaper

Make sure that the shaper module is selected.

In normal mode, the **Cutoff, Resonance** and **Env A Amount** parameters can be edited via the first, second and third encoder. To edit the **Pitch Tracking, Mode** and **LFO 2 Amount** parameters, alternate mode has to be enabled via the **ALT** button.

6.6.1 Cutoff Frequency

Sets the frequency at which the separation between pass band and attenuation band takes place.

- In low-pass mode, all frequencies above the cutoff frequency are attenuated.
- In band-pass mode, the cutoff frequency can be seen as center frequency. A band around this center frequency is kept unaffected, while the rest outside will be attenuated.
- In high-pass mode, all frequencies below the cutoff frequency are attenuated.

6.6.2 Resonance

- In low-pass or high-pass mode, this parameter creates an adjustable "bump" that accentuates the frequencies around the cutoff frequency.
- In band-pass mode, it adjusts the size of the band around the center frequency.

6.6.3 Env A Amount

Determines how much the amplifier envelope (Env A) affects the cutoff frequency. Use this to achieve a natural progression of the filter that corresponds to the volume of the signal.

6.6.4 LFO 2 Amount

Sets the amount of LFO 2 modulation on the cutoff frequency.

6.6.5 Pitch Tracking

This parameter allows the cutoff frequency to follow the pitch of the played notes. The effective pitch is calculated from the note number but also includes any modulation via the pitch wheel. The reference note number where modulation is unaffected is 36. The range of this parameter reaches from -200% to +200%. A setting of *10* in the display corresponds to a tracking of +100%, making the cutoff frequency follow the notes on the keyboard.

6.6.6 Mode

Switches between low-pass, band-pass and high-pass mode.

Low-pass

Band-pass

High-pass

6.7 LFOs

The **Töörö** has 2 independent LFOs that can be used for various modulation purposes.

To access the LFO parameters, press the **LFO** module button. If you press the button more than once, the selection will cycle between LFO 1 and LFO 2. The LED color indicates which LFO is selected:

LFO 1 LFO 2

In addition, the display will show the selected LFO briefly:

LFO 1

LFO 2

In normal mode, the **Shape** and **Speed** parameters can be edited via the first and second encoder. To edit the **Rise** and **Phase** parameters, alternate mode has to be enabled via the **ALT** button.

6.7.1 Shape

This parameter sets the waveform generated by the LFO.

Triangle

Ramp up, rising sawtooth

Ramp down, falling sawtooth

Square

M-shaped wave

Random steps, Sample & hold

Slew, like random but smoothed steps for continuous output

Amplitude modulation, product of a triangle wave and the other LFOs output

6.7.2 Speed

The speed parameter sets the LFO frequency. It covers a large range from 20 seconds up to 250Hz. The lower settings can be used for very slow, nearly unnoticable movements, whereas the faster settings allow the LFO to be used as an additional FM audio source.

6.7.3 Rise

Sometimes it's not desirable to have the LFO at its full modulation after a note is played, but gradually fading it in. This is what the rise parameter does. It allows you to ramp up the modulation depth slowly up to 18 seconds.

6.7.4 Phase

The LFO can either be free-running or starting at a certain phase position after a note is played. A free running LFO is very interesting in mono mode and when using arppegio, as it allows a continuous progression of parameters for notes played in a sequence. A key-synced LFO allows to get more predictable results. Additionally, there is a random phase setting that is especially useful at low speeds.

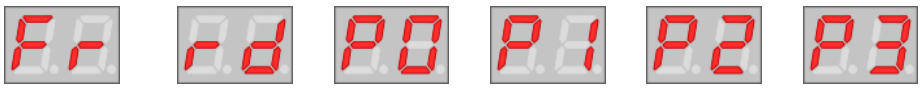

Free running	Random	0°	90°	180°	270°

6.8 Envelopes

The **Töörö** has 2 independent envelopes that are designated for filter and amplifier modulation in first place, but can also be used for other modulation purposes. In addition to the standard ADSR-type envelopes, the **Töörö** offers an additional hold stage on both envelopes after the attack. Also, the sustain level can be modulated via aftertouch. The envelope times cover a range from 1ms to 18s for all parameters.

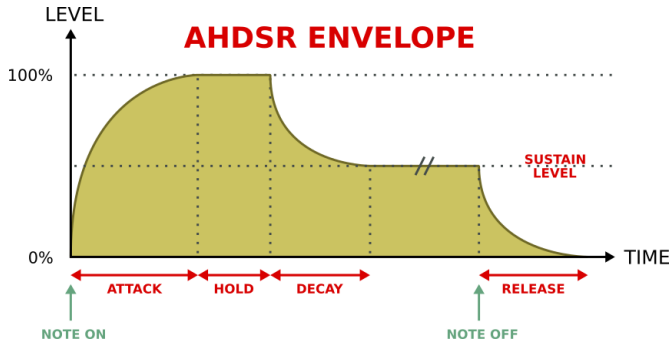

To access the envelope parameters, press the **ENV** module button. If you press the button more than once, the selection will cycle between filter envelope (Env F) and amplifier envelope (Env A). The LED color indicates which envelope is selected:

Env F Env A

In addition, the display will show the selected envelope briefly:

Env F

Env A

In normal mode, the **Attack, Decay, Sustain** and **Release** parameters can be edited via the encoders. To edit the **Velocity, Hold, Aftertouch** and **Trigger** parameters, alternate mode has to be enabled via the **ALT** button.

6.8.1 Attack Time

Sets the time to rise the envelope signal from 0 to the maximum value after the envelope is triggered.

6.8.2 Decay Time

Sets the time required by the envelope signal to fall from the maximum to the sustain level.

6.8.3 Sustain Level

Sets the destination level that is reached at the end of the decay stage.

6.8.4 Release Time

Sets the time to fall from the sustain level to 0 after the trigger is released.

6.8.5 Velocity Amount

This parameter allows to control the overall modulation amount of the envelope via the note velocity. If set to 0, velocity has no effect on the envelope depth. If set to higher values, the amount of velocity sensitivity gradually increases.

6.8.6 Hold Time

The **Töörö's** envelopes have an additional hold stage, whose time can be controlled by this parameter. Setting its value to 0 completely disables the hold stage and the envelope works like a normal ADSR envelope. Increasing the parameter, introduces a hold time after the attack stage where the signal is kept at maximum before the decay stage is entered.

6.8.7 Aftertouch Amount

To offer more control over the sustain stage, its level can be modulated via aftertouch. This parameter defines how much the sustain level is affected by the aftertouch amount. If set to 0, aftertouch has no effect and sustain works in a normal way. On higher settings, the sustain is increasingly affected by the keyboard aftertouch.

6.8.8 Trigger Mode

The trigger mode sets the behaviour of the envelope when a new note is started while it is still running on a previous note.

Always restart from the attack stage with level 0.

Never retrigger. Stay at whatever level/stage it was before the voice was reused.

Continue. Always restart in the attack stage using the last level.

The **Never** and **Continue** modes are especially useful in mono mode or when a lot of voice stealing is happening. In these cases they allow less static playing schemes.

6.9 Amplifier

The amplifier is the last module in the chain before the signal is routed to the parts mixer. It allows you to set the overall preset volume and panorama position.

Press the module button **AMP** to access the parameters of the amplifier.

The display will show the selected module briefly:

Amplifier

In normal mode, the **Level** can be edited via the first encoder. To edit the **Pan**, alternate mode has to be enabled via the **ALT** button.

6.9.1 Level

Sets the overall volume. Use this parameter to match a preset against the others to prevent large jumps in volume when switching presets.

6.9.2 Pan

Sets the position of the sound in the stereo field.

6.10 Arpeggiator

The arpeggiator is a module that allows the creation of melodic patterns from chords or single notes.

Press the module button **LFO** to access the parameters of the arpeggiator. If you press the button more than once, the selection will cycle between LFO 1 and LFO 2. The arpeggiator's parameters are accessible in both cases.

In normal mode, the **Mode** and **Grid** parameters can be edited via the third and fourth encoder. To edit the **Tempo** and **Hold** parameters, alternate mode has to be enabled via the **ALT** button.

6.10.1 Mode

The mode parameter enables the arpeggiator and sets the order and the range of the generated notes.

The following table shows the possible modes as well as an example of generated notes when a C major chord (C3 | E3 | G3) is played.

no	Off	C3 | E3 | G3 (no change)
UP	Up	C3 → E3 → G3
dn	Down	G3 → E3 → C3
rd	Random	(random order)
U2	Up 2	C3 → C4 → E3 → E4 → G3 → G4
d2	Down 2	G3 → G4 → E3 → E4 → C3 → C4
U4	Up 4	C3 → C4 → C3 → C4 → E3 → E4 → E3 → E4 → G3 → G4 → G3 → G4
d4	Down 4	G3 → G4 → G3 → G4 → E3 → E4 → E3 → E4 → C3 → C4 → C3 → C4

6.10.2 Grid

This parameter determines the note value and the gate length of the generated notes.

The displayed value shows the number of clock ticks between each note. Because MIDI clock operates with a rate off 24ppq (pulses per quarter), a value of 24 refers to a quarter note.

The following table shows the relationship between the display and the note value:

Display value	Note value
48	1/2
32	1/2 triplet
24	1/4
16	1/4 triplet
12	1/8
8	1/8 triplet
6	1/16
3	1/32
2	1/32 triplet
1	1/64 triplet

The gate length of the notes is always equivalent to 50% of the note value.

Note: to modify the perceived gate length, make use of the envelope hold and decay parameters.

6.10.3 Tempo

There are two ways to set the base tempo for the arpeggiator:

- **Free-running**: the tempo is set manually, using this parameter.
- **Synchronized**: the tempo is set automatically, using MIDI clock (USB or DIN).

The **Töörö** automatically switches to **synchronized** mode if an external clock is received and reverts back to the **free running** mode when no other clock source is available.

The display always shows the last two digits of the BPM value. If the tempo is set above 100 BPM, a dot is shown after the first digit:

85 BPM

134 BPM

6.10.4 Hold

The hold function allows the arpeggiator to continue its sequence after all notes are released.

- When hold is disabled, notes are only generated when at least one note is pressed.
- With hold enabled, the arpeggiator starts when the first note is received. The generated sequence continues to play after all notes are released. It will then change as soon as a new note or chord is played.

No hold

Hold enabled

Note: in hold mode, the arpeggiator always stays in sync with the MIDI timing. New sequences of notes are only started on the grid. In normal mode, sequences starts immediately when notes are entered.

6.11 Modulation Matrix

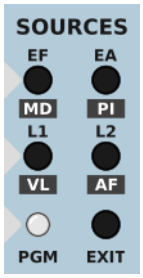

The **Töörö** offers a modulation matrix with 8 sources. Each source can only modulate one destination. To assign the modulation sources to the different destinations, the matrix programming mode has to be entered.

6.11.1 Entering the Matrix Programming Mode

To enter matrix programming mode, press one of the **Sources** buttons on the right side of the panel. Use the **ALT** button before to access the secondary sources. The **PGM** LED will now be lit.

6.11.2 Programming a Modulation Assignment

These are the steps to program a modulation assignment:

- Enter the *Matrix Programming Mode* by pressing one of the sources buttons. Use the **ALT** button before if you want to use one of the alternate sources.
- The display will now indicate the selected modulation source.
- Select the module that should be modulated via the **Module** buttons.
- In order to program a modulation for a parameter that is accessible in alternate mode, make sure that the alternate mode is enabled via the **ALT** button.
- Turn the encoder that corresponds to the parameter that should be modulated.

At the end of this chapter, you'll find some examples how to program a modulation in detail.

6.11.3 Replacing a Modulation Assignment

Programming a new assignment on a modulation source will replace the previous one.

6.11.4 Clearing a Modulation Assignment

Hold down the **EXIT** and press one of the **Sources** buttons to clear any assignment for that modulation source.

6.11.5 Exiting the Matrix Programming Mode

The matrix programming mode can be exited at any time via the **EXIT** button. If no modulation assignment is edited for some seconds, the programming mode is also left automatically.

6.11.6 Modulation Sources

The following modulation sources can be used:

Env F (Filter envelope)

Env A (Amplifier envelope)

LFO 1

LFO 2

Mod wheel

Pitch (note number & pitch wheel)

Note velocity

Aftertouch

6.11.7 Modulation Destinations

The following parameters can be used as modulation destinations:

Module	Parameters
Oscillators	Wave, Pitch, FM Amount, FM Rate, Sync, Level
Extra	Noise, Ring Modulation
Filter	Cutoff, Resonance
Shaper	Cutoff, Resonance
LFO	Speed
Amplifier	Level, Pan

6.11.8 Default Assignments

After initializing a preset, some mappings are pre-assigned with a modulation amount of 0. By sending the appropriate MIDI CCs, you can control the modulation amount for these default mappings.

Source	Target
Env F	Osc 1 Sync
Env A	Osc 1 FM Amount
LFO 1	Osc 1 Wave
LFO 2	Ring Modulation
Mod wheel	Filter Cutoff
Pitch	Osc 2 Sync
Velocity	Osc 1 Wave
Aftertouch	LFO 1 Speed

Furthermore, there is a default assignment for vibrato via mod wheel. Whenever the modulation amount of the mod wheel is set to 0 or modulation is disabled, a default modulation of LFO 2 to master pitch is applied and its intensity is controlled by the mod wheel.

6.11.9 Example 1: Applying LFO 1 Modulation on Osc 1 Pitch

- Make sure that the **ALT** LED is off. If not, press the **ALT** button to disable the alternate mode.
- Press the **L1/VL** button in the sources section.
- The display will now show *L1* to indicate LFO 1 as modulation source.
- Press the **OSC** module button once or twice until the corresponding LED is lit in red and the display shows *O1* briefly.
- Turn the second encoder to set the modulation amount for the **Coarse** parameter.
- Press the **EXIT** button in the sources section or wait a few seconds to exit the programming mode automatically.

6.11.10 Example 2: Applying Pitch Modulation on Amplifier Pan

- Make sure that the **ALT** LED is on. If not, press the **ALT** button to enable the alternate mode.
- Press the **EA/PI** button in the sources section.
- The display will now show *PI* to indicate pitch as modulation source.
- Press the **AMP** module button. The display will show *AM* briefly.
- Press the **ALT** button again to select the alternate parameters for modulation. The **ALT** LED will be lit now.
- Turn the first encoder to set the modulation amount for the **Pan** parameter.
- Press the **EXIT** button in the sources section or wait a few seconds to exit the programming mode automatically.

7 Multi Parameters

7.1 Overview

Töörö overall multi structure

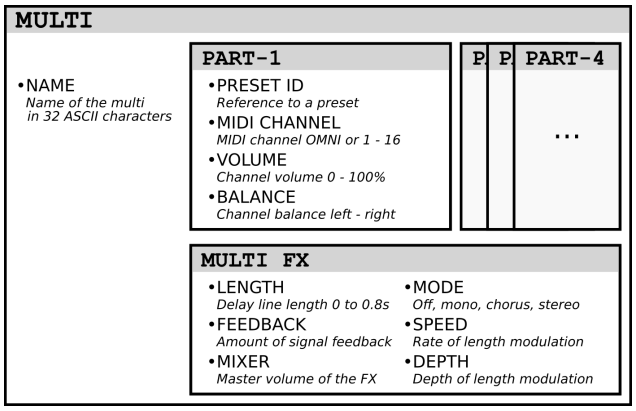

Note: The multi name is only accessible by Sysex messages.

7.2 Parts Mixer

The parts mixer allows to control the volume and balance of all parts. The four encoders correspond to the part number.

- Make sure that alternate mode is disabled to set the volumes or enable it to set the balances via the **ALT** button.
- Press and hold the **VOL/BAL** button.
- Turn the encoder that corresponds to the part to change the value.
- The LEDs above the encoders will show an optical representation of the value by their brightness and color.

7.3 Multi FX

The **Töörö** offers time-domain effects that are based on the repetition of the original signal at different intervals. The delay time of each effect can be modulated by an internal LFO. The effects are applied to all parts of the multi with the same intensity.

Press the module button **AMP** to access the parameters of the multi fx.

In normal mode, the **Length, Feedback** and **Mix** parameters can be edited via the second, third and fourth encoder. To edit the **Mode, Speed** and **Depth** parameters, alternate mode has to be enabled via the **ALT** button.

7.3.1 Length

Sets the delay time and therefore the frequency of the repetitions. The range of this parameter covers a span from a few milliseconds up to 780ms. Depending on the setting, you can get results in a wide range from thickening the sound with barely noticable delays up to rhythmic patterns.

7.3.2 Feedback

The feedback parameter controls the amount of repetitions that are generated. When set to maximum, infinite repetitions are generated, allowing drones and lush ambient sounds.

7.3.3 Mix

This parameter sets the level of the effect signal that is mixed with the dry signal. The level of the dry signal is not affected by this setting.

7.3.4 Mode

This parameter chooses which effect is being used:

No effect

Mono delay

Chorus / Flanger

Stereo delay

- The mono delay repeats the original signal a defined number of times. The repetitions are progressively degraded, they lose their loudness, dynamic precision and some of their frequency content.
- Although the chorus/flanger effect does not feel like a delay, it uses the same ground principles. The repetitions are closer and modulated, the perceived effect is a constant variation of the sound spectrum giving it a thicker character. This effect has multiple uses, try to experiment with different settings!
- The stereo delay is very similar to the mono delay. The essential difference is the repetitions come first from the left channel and then from the right channel and so on. It gives a nice stereo image to the sound.

7.3.5 Speed

Sets the speed of the modulation that is applied to the delay time. It covers a range from 16s to 6Hz.

7.3.6 Depth

Sets the amount of modulation that is applied to the delay time.

8 Filter Tuning

The **Töörö** contains an analog FL A847 filter for each voice. According to the nature of analog components, each voice will have slightly different sound. In order to minimize these variations, the filter can be tuned via an automated procedure.

- Wait at least 15 minutes after the **Töörö** has been powered up. This is to ensure that all internal components are working at their desired operation temperature.
- Turn down the volume on your attached audio system or disconnect the output jacks. While the tune procedure is running, some high pitched tones will be generated at high output levels that could damage your speakers and hearing.
- Press and hold the **SYSTEM** button. Then press the module button labelled **AMP**. This button also has a secondary vertical label **TUNE** left to it.
- The tune procedure is now started and will take about 2 minutes to proceed. While running, the display will show some screens that represent the individual steps.
- After the tuning is done, the display will return to show the preset number again.

9 Firmware Update

To benefit from new features (and potential bug-fixes), the internal firmware of the **Töörö** can be re-programmed. Updates should only be performed when absolutely necessary and the procedure steps and recommendations should be strictly followed.

In order to check which version of the firmware is currently installed, the display will show the version number briefly right after the **Töörö** is powered on.

Important: Failing to observe the update procedure may simply **brick your device!** Therefore, please proceed carefully.

To update your **Töörö** instrument to the **latest firmware revision**, please refer to the appropriate update documentation and read the following tutorials at:

https://fredslab.net/en/tooro-module.php

10 Specifications

Here you will find all technical data concerning the **Töörö**.

10.1 Sound Engine

10.1.1 General

- Number of parts: 4
- Maximal polyphony: 6 voices
- MIDI channel selection, overall volume and panning settings per part

10.1.2 Oscillators

Two 12bit digital oscillators with:

- Waveform morphing
- Factory and user tables
- Additional sine modulator for linear through zero phase modulation
- Auto-sync feature (hardsync)

Additional sources:

- White noise
- Ring modulation of both oscillators

10.1.3 Filter

FL A847 optocoupler based 12dB/octave low-pass filter with self-oscillation and saturation.

10.1.4 Shaper

Digital multimode filter with low-pass, band-pass and high-pass.

10.1.5 Envelopes

Two ADSR envelopes with additional hold stage and multiple triggering options.

10.1.6 LFOs

Two complex LFOs with various waveforms and AD envelope.

10.1.7 Arpeggiator

MIDI-syncable arpeggiator with multiple modes and patterns.

10.1.8 DCA

Digitally controlled attenuator with volume and panning control.

10.1.9 Multi FX

Effect types:

- Mono modulated delay
- Stereo chorus / flanger
- Stereo modulated line

10.2 Memory

- 100 user presets
- 10 user multis

10.3 Line Outputs

- -10dBu (single voice) / 0.25V_{RMS} / 0.7Vpkpk
- +20dBu (full scale) / 7.7V_{RMS} / 20Vpkpk
- Impedance DC 1kΩ, AC 0Ω (f < 30kHz)

10.4 Audio Resolution

- 44kHz, 12Bit

10.5 Master Clocks

- MCU: 80MHz
- USB: 48MHz
- OSCs: 792kHz

10.6 Power

- USB bus power +5V +/-5%
- 350mA (maximum)

10.7 Connectors

- 2 line-level unbalanced 6.35mm jacks (mix left & right)
- 2 instrument-level 3.5mm jacks for separate voice outputs (for voice 1-4 only)
- 1 MIDI in DIN jack
- 1 MIDI out DIN jack
- 1 USB type B socket (for power and MIDI over USB)

10.8 User Interface

- 4 encoders
- 14 tactile switches
- Dual digit 7-segment hexadecimal display
- 12 leds
- 1 power switch

10.9 Dimensions & Weight

- 160mm x 100mm x 60mm (unit)
- 350 grams (unit)

10.10 Mechanics

- Aluminum industrial enclosure
- 4 rubber feet

10.11 Accessories

- Quickstart guide
- USB cable 1m

11 MIDI Implementation

11.1 Channel Voice Messages

Channel Voice Messages are used to send basic music events to one specific channel or part. They consists in 3 bytes: the **status** byte, followed by two **data** bytes. Here follows the list of supported messages.

11.1.1 Note Off

Stops the playback of a note.

```
Byte: 0     1     2
Data: 0x8c  note  velo
      c    = MIDI channel (0 - 15)
      note = MIDI note (0 - 127)
      velo = note velocity (0 - 127)
```

11.1.2 Note On

Starts the playback of a note.

```
Byte: 0     1     2
Data: 0x9c  note  velo
      c    = MIDI channel (0 - 15)
      note = MIDI note (0 - 127)
      velo = note velocity (1 - 127)*

* Note: a velocity of 0 corresponds to a Note off event.
```

11.1.3 Polyphonic Aftertouch

Polyphonic aftertouch / pressure

```
Byte: 0     1      2
Data: 0xAc  note  value
      c      = MIDI channel (0 - 15)
      note   = MIDI note
      value  = aftertouch value
```

11.1.4 Controller Change

Modifies a specific sound parameter value of the given channel (= part).

```
Byte: 0     1      2
Data: 0xBc  index  value
      c      = MIDI channel (0 - 15)
      index  = controller number (see the CC list)
      value  = controller value* (see the CC list)

* Note: internal parameter values are represented in 10 bit format.
```

```
Since MIDI CCs can only transmit 7 bit values, values transmitted
are internally interpolated and smoothed.
```

11.1.5 Program Change

Selects the current *preset*.

```
Byte: 0     1
Data: 0xCc  preset
      c      = MIDI channel (0 - 15)
      preset = preset number (0 - 99)
```

11.1.6 Channel Aftertouch

Controls the pressure level of the given channel (= part) notes.

```
Byte: 0     1     2
Data: 0xDc  value
     c     = MIDI channel (0 - 15)
     value = Pressure value (0 - 127)
```

11.1.7 Pitch Bend

Increases or decreases the pitch of the given channel (= part) notes.

```
Byte: 0     1     2
Data: 0xEc  least most
      c     = MIDI channel (0 - 15)
      least = least significant 7bit of 14bit bend value*
      most  = most significant 7bit of 14bit bend value*

* Note: bend value is centered around 0x4000 = 0 cents.
```

11.2 System Real Time Messages

System Real Time Messages are used to send high-priority messages relative to music timing and sequences.

11.2.1 Clock Start

Start all parts arpeggiators if enabled.

```
Byte: 0
Data: 0xFA
```

11.2.2 Clock Continue

Re-start all parts arpeggiators if enabled.

```
Byte: 0
Data: 0xFB
```

11.2.3 Clock Stop

Stop all parts arpeggiator.

```
Byte: 0
Data: 0xFC
```

11.2.4 Clock Tick

Synchronizes the MIDI master clock of the sound module. A tick corresponds to 1/24th of a quarter note.

```
Byte: 0
Data: 0xF8
```

11.2.5 Active Sensing

Ensure the MIDI connection is working.

Once first sent, **active sensing** messages must be sent to the module periodically. If the module stops receiving **active sensing** messages for an extended period of time, it will automatically perform a **all sounds off**.

```
Byte: 0
Data: 0xFE
```

11.3 MIDI CC Assignments

Controller Change Messages are used to alter sound parameters of a given channel. They allow more musical expressivity by adjusting the sound character while playing or allow the editing of the part parameters from an extended/remote MIDI interface or a computer software (sequencer or preset editor).

The messages consist of 3 bytes: the **status** byte, followed by the **control number** byte and then terminated by the **control value** byte. Here's the list of supported messages:

Section	Parameter	CC Number
General	Modwheel	1
Preset	Osc 1 Wave	70
	Osc 1 Coarse	21
	Osc 1 FM Amount	22
	Osc 1 Level	23
	Osc 1 Table	24
	Osc 1 Fine	25
	Osc 1 FM Rate	26
	Osc 1 Sync	27
	Osc 2 Wave	77
	Osc 2 Coarse	31
	Osc 2 FM Amount	32
	Osc 2 Level	33
	Osc 2 Table	34
	Osc 2 Fine	35
	Osc 2 FM Rate	36
	Osc 2 Sync	37
	Extra Noise	78
	Extra Ring	79
	Env A Attack	73
	Env A Decay	40
	Env A Sustain	41
	Env A Release	72
	Env A Velo	43
	Env A Hold	42
	Env A After	44
	Env A Trigger	45
	Env F Attack	46
	Env F Decay	47
	Env F Sustain	48
	Env F Release	49
	Env F Velo	51
	Env F Hold	50
	Env F After	52
	Env F Trigger	53

Section	Parameter	CC Number
Preset	Filter Resonance	71
	Filter Cutoff	74
	Filter Env F Amount	54
	Filter Track	55
	Filter After	56
	Filter LFO 1 Amount	57
	Shaper Cutoff	75
	Shaper Resonance	76
	Shaper Env A Amount	58
	Shaper Track	59
	Shaper Mode	60
	Shaper LFO 2 Amount	61
	LFO 1 Shape	102
	LFO 1 Speed	103
	LFO 1 Rise	104
	LFO 1 Phase	105
	LFO 2 Shape	106
	LFO 2 Speed	107
	LFO 2 Rise	108
	LFO 2 Phase	109
	Arp Mode	110
	Arp Grid	111
	Arp Tempo	112
	Arp Hold	113
	Amp Level	80
	Amp Pan	81
	Modulation Env F	17
	Modulation Env A	18
	Modulation LFO 1	19
	Modulation LFO 2	20
	Modulation Mod Wheel	87
	Modulation Pitch	88
	Modulation Velocity	89
	Modulation Aftertouch	90
	Bend Range	86
	Tune	85
Multi	Level	07
	Balance	10
	FX Mix	91
	FX Feedback	12
	FX Length	14
	FX Depth	93
	FX Mode	13
	FX Speed	15
System	All Sounds Off	120
	Reset All Controllers	121
	All Notes Off	123
	Omni Off	124
	Omni On	125
	Mono Mode	126
	Poly Mode	127

12 Sysex Implementation

Sysex or System Exclusive Messages are lengthier MIDI messages used to transfer, save and load preset and multi parameters. Two types of messages exist: **requests** and **dumps**.

Requests are sent to the music instrument to ask for the dump of a specific preset or multi.

Dumps are sent by the instrument in response to the reciprocal request or are sent to the instrument to replace a specific preset or multi. Dumps previously requested can be sent back without any alteration, to restore a previous memory configuration.

12.1 Requests

12.1.1 Multi Request

Request a specific multi from the memory.

```
Byte: 0    1    2    3
Data: 0xF0 0x01 0xMM 0xF7
        0xF0 = Sysex start
        0x01 = Service 1 => "Multi request"
        0xMI = Multi id (0-9 = memory slot, 0x7F = multi edit buffer)
        0xF7 = Sysex end
```

12.1.2 Preset Request

Request a specific preset from the memory.

```
Byte: 0    1    2    3
Data: 0xF0 0x02 0xPP 0xF7
        0xF0 = Sysex start
        0x02 = Service 2 => "Preset request"
        0xPI = Preset id (0-99 = memory slot, 0x70-0x74 = Part 1-4)
        0xF7 = Sysex end
```

12.2 Dumps

12.2.1 Multi Dump

Multi parameter dump. Sysex is 104 bytes long.

```
Byte: 0    1    2    n   103
Data: 0xF0 0x11 0xMM ... 0xF7
      0xF0 = Sysex start
      0x11 = Service 17 => "Multi dump"
      0xMI = Multi id (0-10 = memory slot, 0x7F = current edit buffer)
     ... data (100 bytes)
      0xF7 = Sysex end
```

Data is packed, see *Data Packing* section for details.

Index	Length	Description
0	2	Preset ID Part 1
2	2	Preset ID Part 2
4	2	Preset ID Part 3
6	2	Preset ID Part 4
8	2	MIDI Channel Part 1
10	2	MIDI Channel Part 2
12	2	MIDI Channel Part 3
14	2	MIDI Channel Part 4
16	2	Volume Part 1
18	2	Volume Part 2
20	2	Volume Part 3
22	2	Volume Part 4
24	2	Balance Part 1
26	2	Balance Part 2
28	2	Balance Part 3
30	2	Balance Part 4
32	2	FX Length
34	2	FX Feedback
36	2	FX Mix
38	2	FX Mode
40	2	FX Speed
42	2	FX Depth
44	2	Reserved
46	2	Flags (internal)
48	32	Name

12.2.2 Preset Dump

Preset parameter dump. Sysex is 264 bytes long.

```
Byte: 0    1    2    n   263
Data: 0xF0 0x12 0xPP ... 0xF7
      0xF0 = Sysex start
      0x12 = Service 18 => "Preset dump"
      0xPI = Preset id (0-99 = memory slot, 0x70-0x73 = Part 1-4)
     ... data (260 bytes)
      0xF7 = Sysex end
```

Data is packed, see *Data Packing* section for details.

Index	Length	Description
0	2	Osc 1 Wave
2	2	Osc 1 Coarse
4	2	Osc 1 FM Amount
6	2	Osc 1 Level
8	2	Osc 1 Table
10	2	Osc 1 Fine
12	2	Osc 1 FM Rate
14	2	Osc 1 Sync
16	2	Osc 2 Wave
18	2	Osc 2 Coarse
20	2	Osc 2 FM Amount
22	2	Osc 2 Level
24	2	Osc 2 Table
26	2	Osc 2 Fine
28	2	Osc 2 FM Rate
30	2	Osc 2 Sync
32	2	Extra Noise
34	2	Extra Ring
36	2	Shaper Cutoff
38	2	Shaper Resonance
40	2	Shaper Env A Amount
42	2	Shaper Track
44	2	Shaper Mode
46	2	Shaper LFO 2 Amount
48	2	Filter Cutoff
50	2	Filter Resonance
52	2	Filter Env F Amount
54	2	Filter Track
56	2	Filter After
58	2	Filter LFO 1 Amount
60	2	Env F Attack
62	2	Env F Decay
64	2	Env F Sustain
66	2	Env F Release
68	2	Env F Velo
70	2	Env F Hold
72	2	Env F After
74	2	Env F Trigger
76	2	Env A Attack
78	2	Env A Decay
80	2	Env A Sustain
82	2	Env A Release
84	2	Env A Velo
86	2	Env A Hold
88	2	Env A After
90	2	Env A Trigger

Index	Length	Description
92	2	LFO 1 Shape
94	2	LFO 1 Speed
96	2	LFO 1 Rise
98	2	LFO 1 Phase
100	2	LFO 2 Shape
102	2	LFO 2 Speed
104	2	LFO 2 Rise
106	2	LFO 2 Phase
108	2	Arp Mode
110	2	Arp Grid
112	2	Arp Tempo
114	2	Arp Hold
116	2	Amp Level
118	2	Amp Pan
120	2	Env F Amount
122	2	Env F Target
124	2	Env A Amount
126	2	Env A Target
128	2	LFO 1 Amount
130	2	LFO 1 Target
132	2	LFO 2 Amount
134	2	LFO 2 Target
136	2	Wheel Amount
138	2	Wheel Target
140	2	Pitch Amount
142	2	Pitch Target
144	2	Velo Amount
146	2	Velo Target
148	2	After Amount
150	2	After Target
152	8	Osc 1 Waves
160	8	Osc 2 Waves
168	2	Tune
170	2	Reserved
172	2	Bend Range
174	2	Flags (internal)
176	32	Name

12.2.3 Data Packing

Sysex payload data is packed because of the 7-bit restriction of the MIDI format.

```
Byte Description
0:   byte 0, lowest 7 bits
1:   byte 1, lowest 7 bits
2:   byte 2, lowest 7 bits
3:   byte 3, lowest 7 bits
4:   tops, top 7th bits of the 4 preceeding bytes
5:   byte 4, lowest 7 bits
6:   byte 5, lowest 7 bits
7:   byte 6, lowest 7 bits
8:   byte 7, lowest 7 bits
9:   tops, top 7th bits of the 4 preceeding bytes
...
```

Packing algorithm:

```
int length = 3;
int size = sizeof(content);
for (int i = 0; i < size / 4; i++) {
    int tops = 0;
    sysex[length++] = *data & 0x7F;
    tops |= (*data++ & 0x80) >> 7;
    sysex[length++] = *data & 0x7F;
    tops |= (*data++ & 0x80) >> 6;
    sysex[length++] = *data & 0x7F;
    tops |= (*data++ & 0x80) >> 5;
    sysex[length++] = *data & 0x7F;
    tops |= (*data++ & 0x80) >> 4;
    sysex[length++] = tops;
}
```

Unpacking algorithm:

```
int cursor = 3;
int blocks = (length - 4) / 5;
for (int i = 0; i < blocks; i++) {
    int tops = sysex[cursor + 4] ;
    *data++ = sysex[cursor++] | ((tops << 7) & 0x80);
    *data++ = sysex[cursor++] | ((tops << 6) & 0x80);
    *data++ = sysex[cursor++] | ((tops << 5) & 0x80);
    *data++ = sysex[cursor++] | ((tops << 4) & 0x80);
    cursor++;
}
```

13 Schematics

To minimize electronic waste and ensure long product life, Fred's Lab is willing to provide all technical documents needed to repair his products. The following schematics are provided "as is" with no warranty of any kind. Any modification made to a Fred's Lab instrument immediately voids the included 3-year product warranty. Repairs must be carried out by a competent repair service. Fred's Lab stays available for the maintenance of your instruments. Do not hesitate to contact the support service for a free quote. Spare parts can directly be ordered from us.

Intellectual property:

The following technical documents are provided for advisory, repair and educational purposes only. They remain the entire property of Fred's Lab and cannot be reproduced without a written authorization. Users are granted to draw inspiration from this information for their projects (commercial or not), while respecting the limits of non-cloning or counterfeiting the original product. If in doubt about legal matters, please contact us.

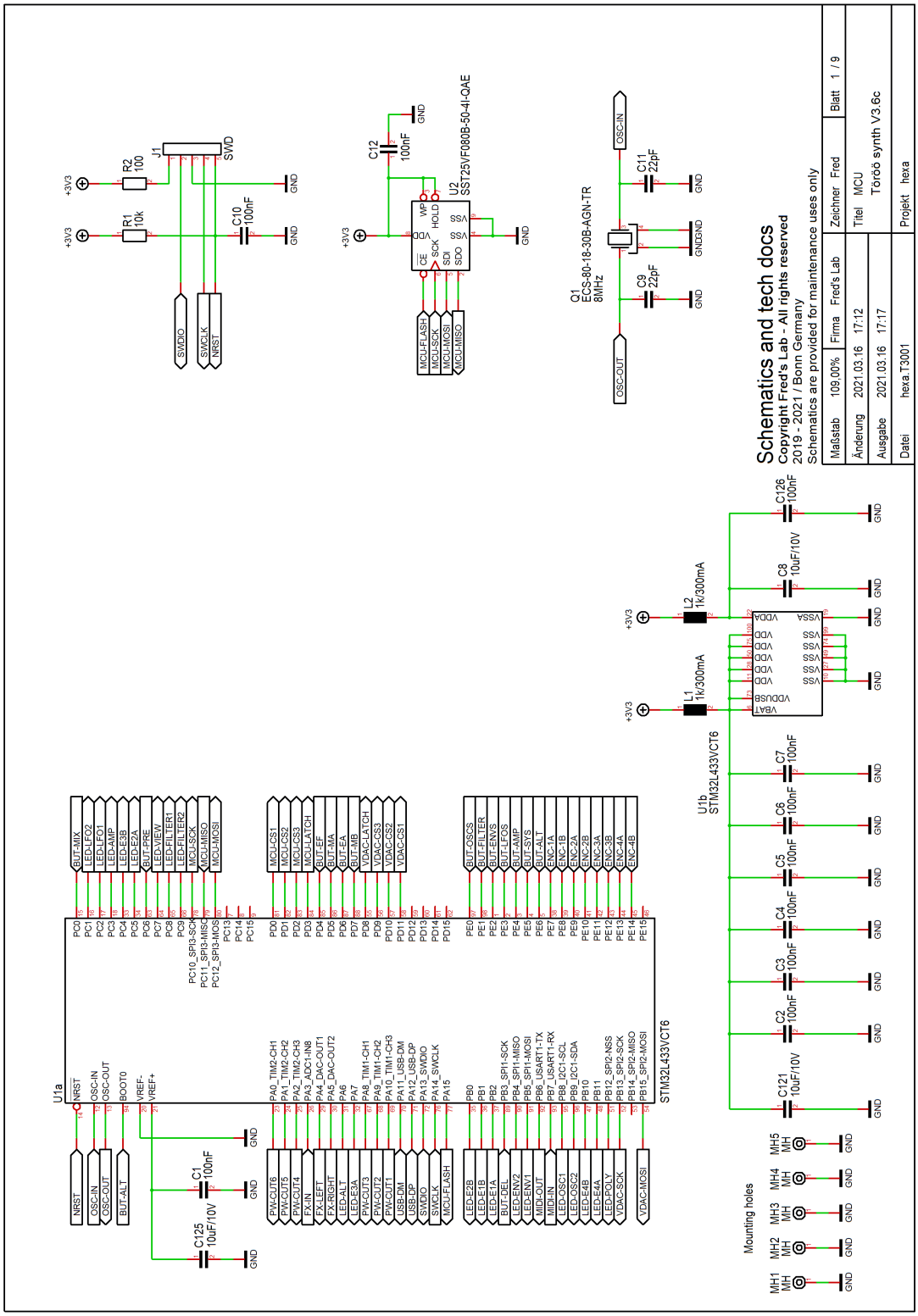
Schematics and tech docs
Copyright Fred's Lab - All rights reserved
2019 - 2021 / Bonn Germany
Schematics are provided for maintenance uses only
Maßstab 109,00% Firma Fred's Lab Zeichner Fred Blatt 1 / 9
Änderung 2021.03.16 17:12 Titel MCU
Ausgabe 2021.03.16 17:17 Töröö synth V3.6c
Datei hexa.T3001 Projekt hexa
U1a
STM32L433VCT6
U1b
STM32L433VCT6
U2
SST25VF080B-50-4I-QAE
Q1
ECS-80-18-30B-AGN-TR
8MHz
J1
SWD
Mounting holes

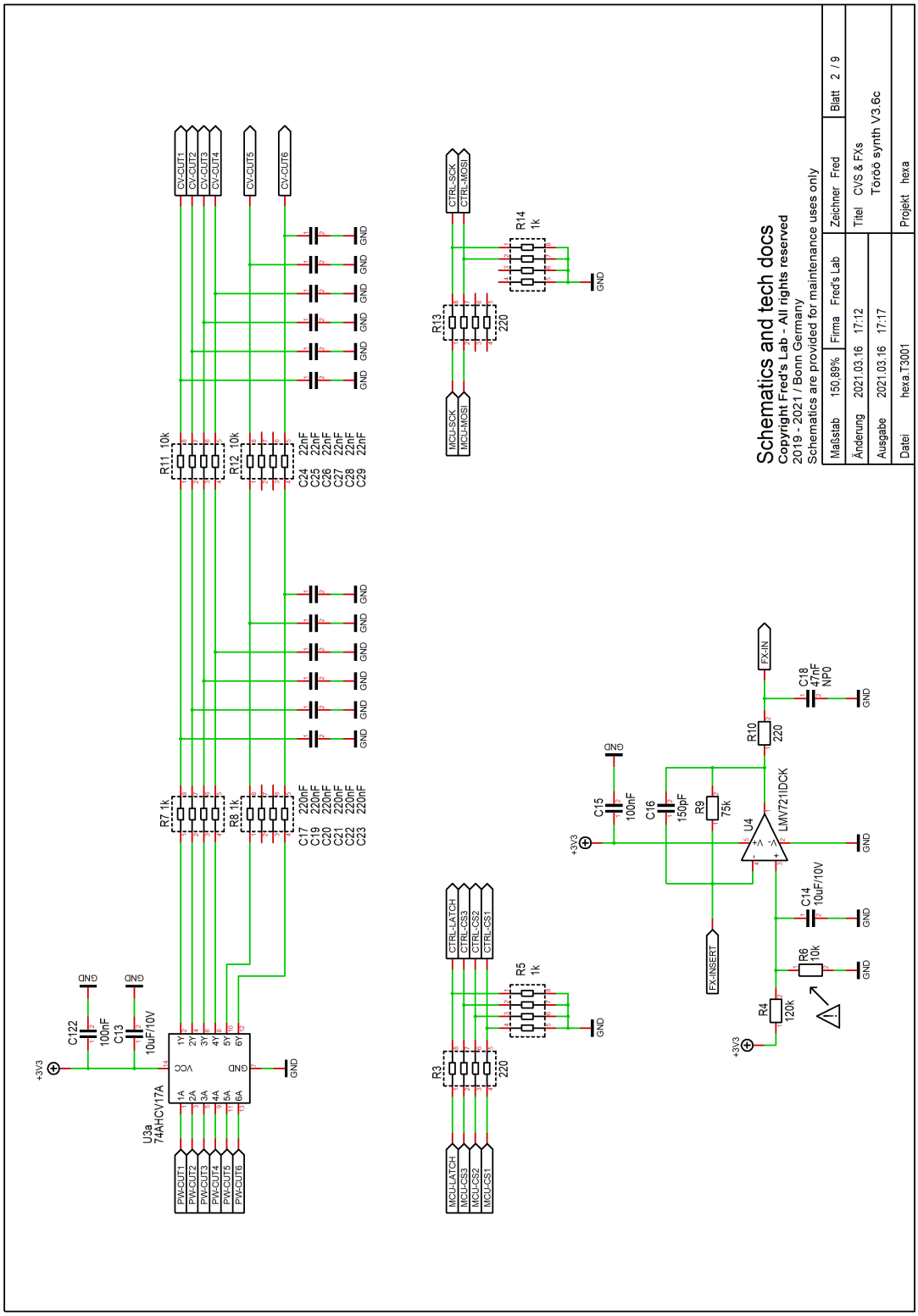
Schematics and tech docs
Copyright Fred's Lab - All rights reserved
2019 - 2021 / Bonn Germany
Schematics are provided for maintenance uses only
Maßstab 150,89% Firma Fred's Lab Zeichner Fred Blatt 2 / 9
Änderung 2021.03.16 17:12 Titel CVS & FXs
Ausgabe 2021.03.16 17:17 Töröö synth V3.6c
Datei hexa.T3001 Projekt hexa
U3a 74AHCV17A
U4 LMV721DCK
CV-OUT1
CV-OUT2
CV-OUT3
CV-OUT4
CV-OUT5
CV-OUT6
CTRL-SCK
CTRL-MOSI
CTRL-LATCH
CTRL-CS3
CTRL-CS2
CTRL-CS1
MCU-SCK
MCU-MOSI
MCU-LATCH
MCU-CS3
MCU-CS2
MCU-CS1
PWM-OUT1
PWM-OUT2
PWM-OUT3
PWM-OUT4
PWM-OUT5
PWM-OUT6
FX-IN
FX-INSERT
+3V3
GND

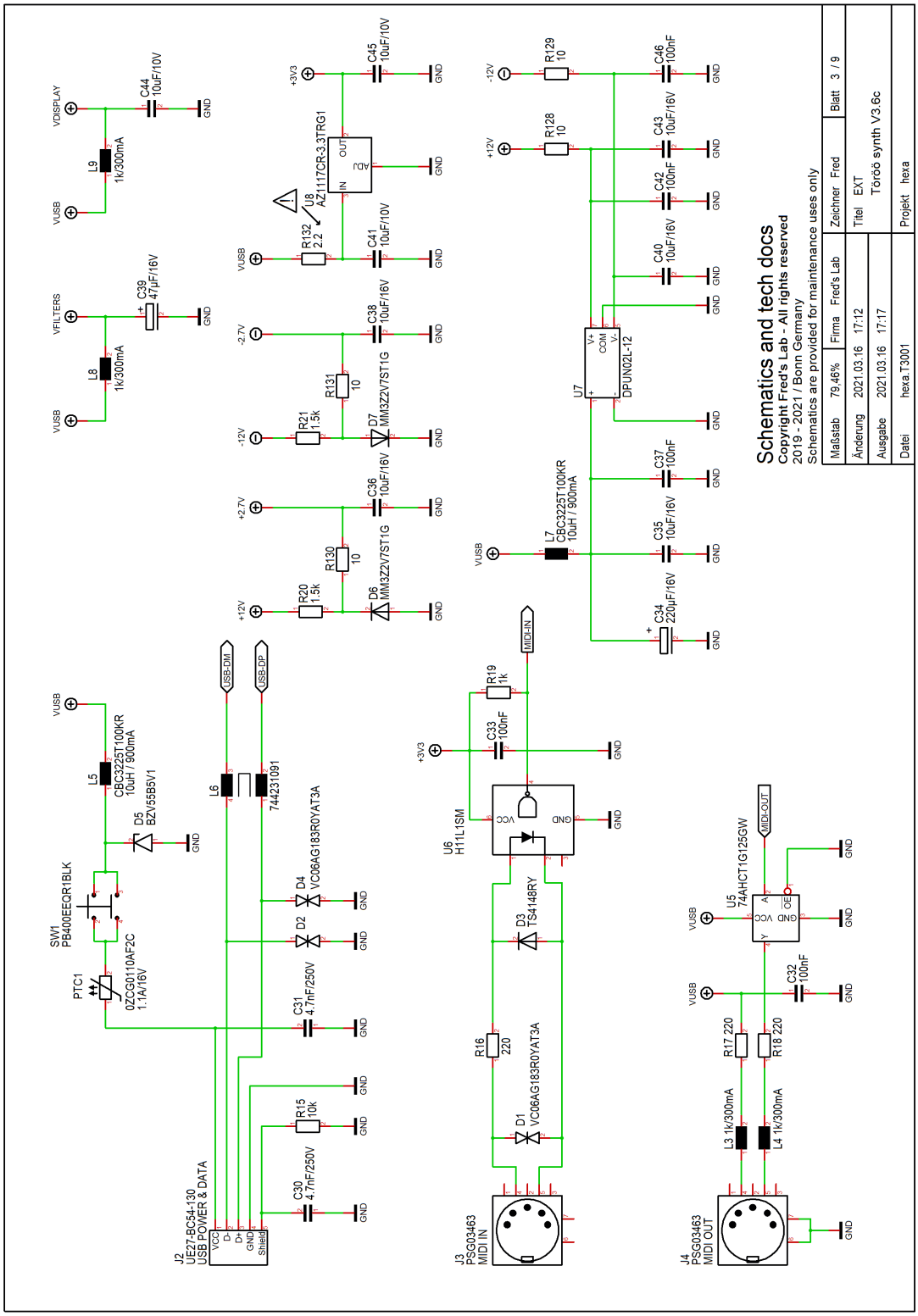
Schematics and tech docs
Copyright Fred's Lab - All rights reserved
2019 - 2021 / Bonn Germany
Schematics are provided for maintenance uses only
Maßstab 79,46% Firma Fred's Lab Zeichner Fred Blatt 3 / 9
Änderung 2021.03.16 17:12 Titel EXT
Ausgabe 2021.03.16 17:17 Töröö synth V3.6c
Datei hexa.T3001 Projekt hexa
J2 UE27-BC54-130 USB POWER & DATA
J3 PSG03463 MIDI IN
J4 PSG03463 MIDI OUT
U6 H11L1SM
U7 DPUN02L-12
U8 AZ1117CR-3.3TRG1
U5 74AHCT1G125GW
SW1 PB400EEQR1BLK
PTC1 0ZCG0110AF2C 1.1A/16V
L5 CBC3225T100KR 10uH / 900mA
L6 744231091
L7 CBC3225T100KR 10uH / 900mA
L8 1k/300mA
L9 1k/300mA
L3 1k/300mA
L4 1k/300mA
D1 VC06AG183R0YAT3A
D2 VC06AG183R0YAT3A
D3 TS4148RY
D4 VC06AG183R0YAT3A
D5 BZV55B5V1
D6 MM3Z2V7ST1G
D7 MM3Z2V7ST1G
R15 10k
R16 220
R17 220
R18 220
R19 1k
R20 1.5k
R21 1.5k
R128 10
R129 10
R130 10
R131 10
R132 2.2
C30 4.7nF/250V
C31 4.7nF/250V
C32 100nF
C33 100nF
C34 220uF/16V
C35 10uF/16V
C36 10uF/16V
C37 100nF
C38 10uF/16V
C39 47uF/16V
C40 10uF/16V
C41 10uF/10V
C42 100nF
C43 10uF/16V
C44 10uF/10V
C45 10uF/10V
C46 100nF
VUSB
VDISPLAY
VFILTERS
USB_DM
USB_DP
MIDI-IN
MIDI-OUT
+3V3
+12V
-12V
+2.7V
-2.7V
GND

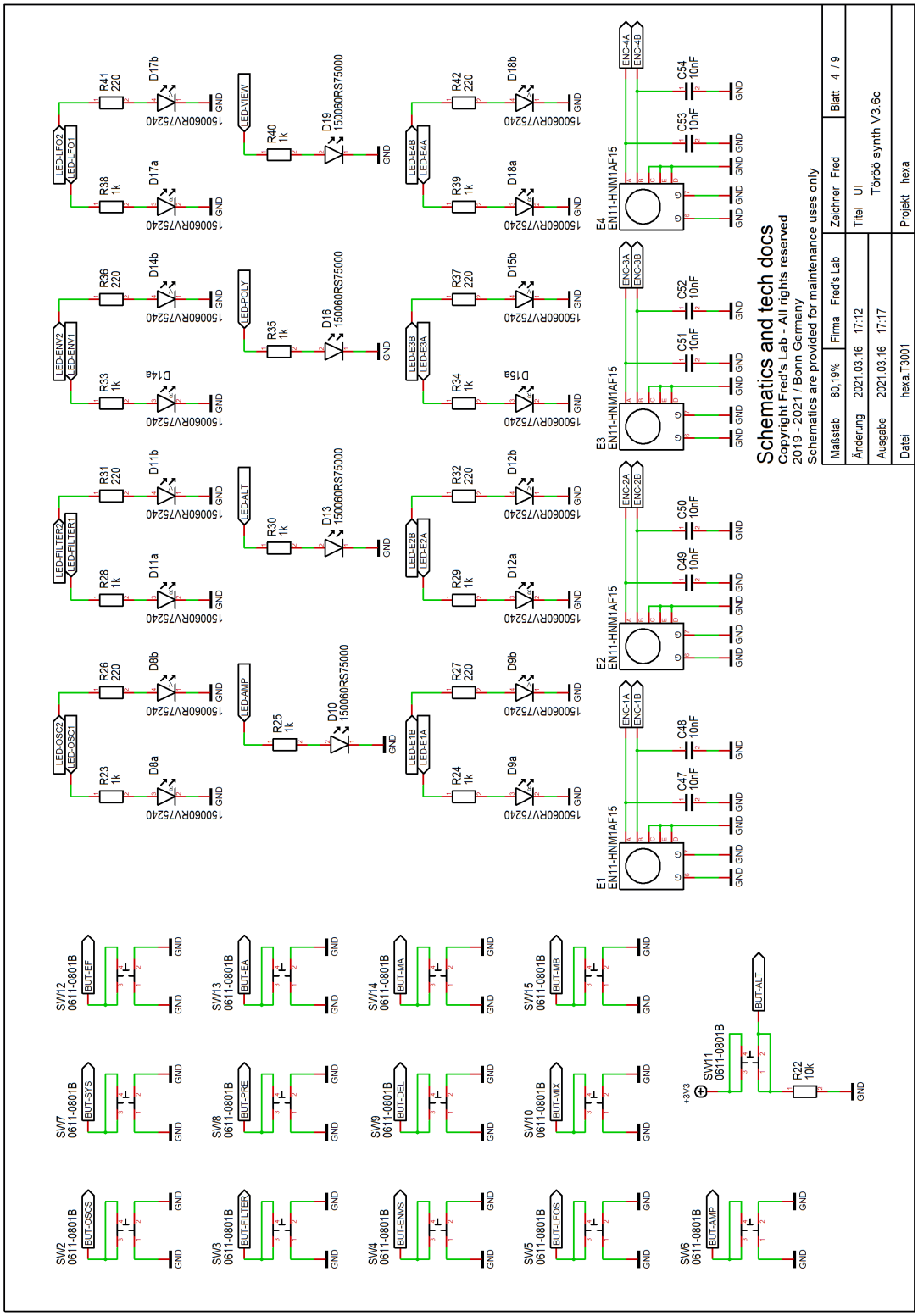
Schematics and tech docs
Copyright Fred's Lab - All rights reserved
2019 - 2021 / Bonn Germany
Schematics are provided for maintenance uses only
Maßstab 80,19% Firma Fred's Lab Zeichner Fred Blatt 4 / 9
Änderung 2021.03.16 17:12 Titel UI
Ausgabe 2021.03.16 17:17 Töröö synth V3.6c
Datei hexa.T3001 Projekt hexa

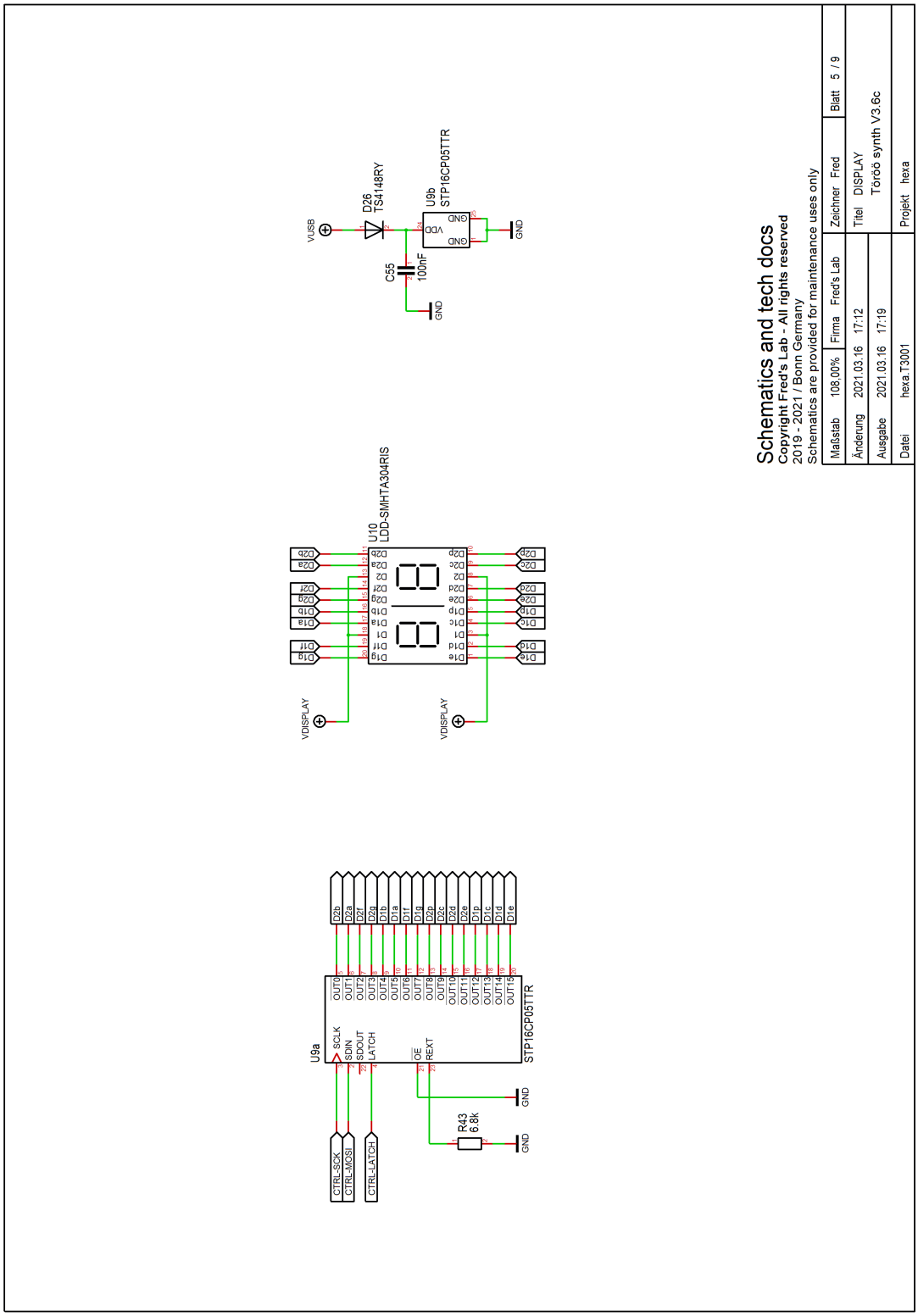
VUSB
D26
TS4148RY
C55
100nF
GND
U9b
STP16CP05TTR
VDD
GND
GND
GND
U10
LDD-SMHTA304RIS
VDISPLAY
VDISPLAY
D2b
D2a
D2f
D2g
D1b
D1a
D1f
D1g
D2b
D2a
D2f
D2g
D1b
D1a
D1f
D1g
D2p
D2c
D2d
D2e
D1p
D1c
D1d
D1e
D2p
D2c
D2d
D2e
D1p
D1c
D1d
D1e
U9a
SCLK
SDIN
SDOUT
LATCH
OE
REXT
OUT0
OUT1
OUT2
OUT3
OUT4
OUT5
OUT6
OUT7
OUT8
OUT9
OUT10
OUT11
OUT12
OUT13
OUT14
OUT15
STP16CP05TTR
CTRL-SCK
CTRL-MOSI
CTRL-LATCH
R43
6.8k
GND
GND
Schematics and tech docs
Copyright Fred's Lab - All rights reserved
2019 - 2021 / Bonn Germany
Schematics are provided for maintenance uses only
Maßstab 108,00% Firma Fred's Lab Zeichner Fred Blatt 5 / 9
Änderung 2021.03.16 17:12 Titel DISPLAY
Ausgabe 2021.03.16 17:19 Töröö synth V3.6c
Datei hexa.T3001 Projekt hexa

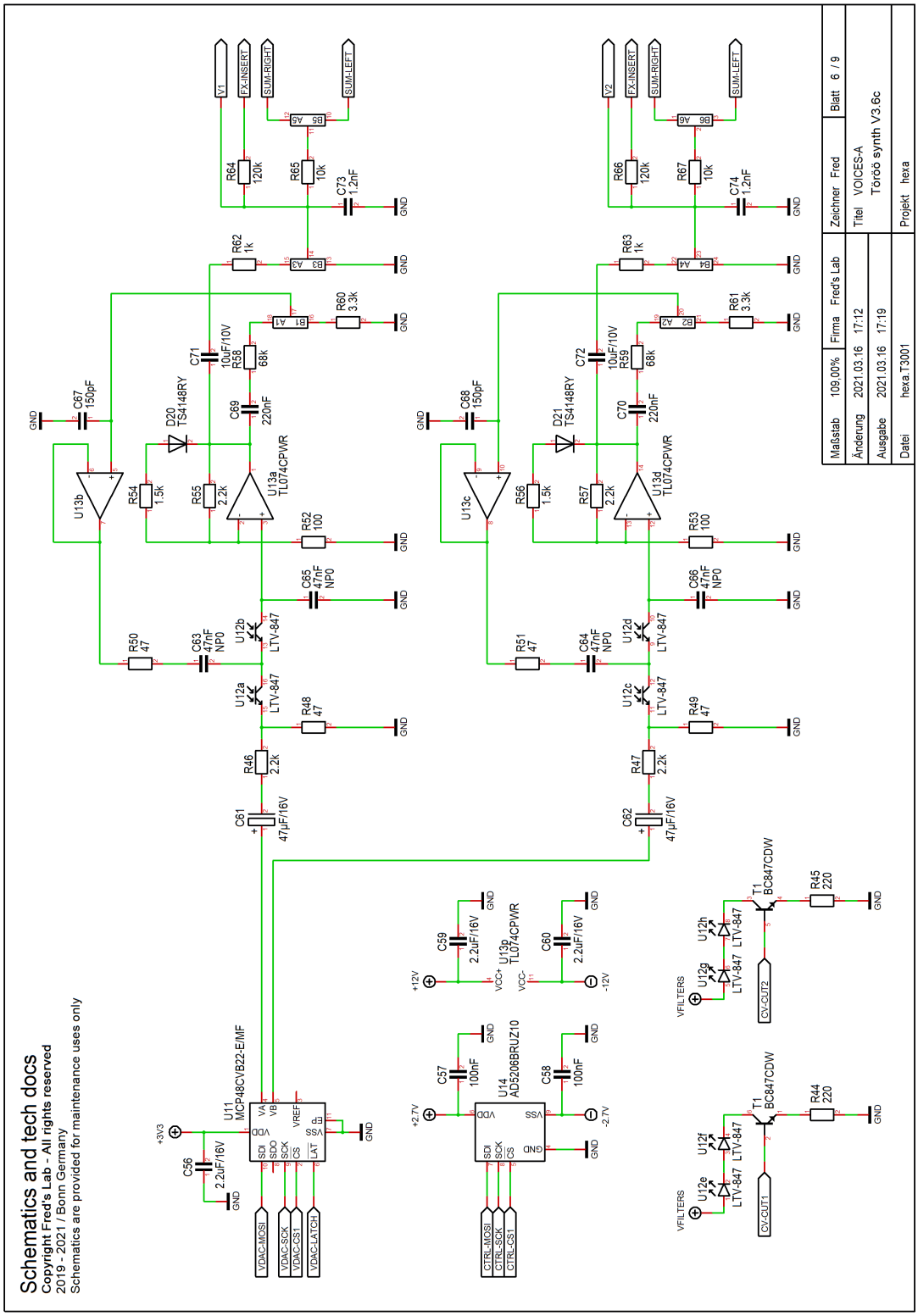
Schematics and tech docs
Copyright Fred's Lab - All rights reserved
2019 - 2021 / Bonn Germany
Schematics are provided for maintenance uses only
Maßstab 109,00%
Firma Fred's Lab
Zeichner Fred
Blatt 6 / 9
Änderung 2021.03.16 17:12
Titel VOICES-A
Töröö synth V3.6c
Ausgabe 2021.03.16 17:19
Datei hexa.T3001
Projekt hexa
U11 MCP48CVB22-E/MF
U14 AD5206BRUZ10
U13a TL074CPWR
U13b
U13c
U13d TL074CPWR
U13p TL074CPWR
U12a LTV-847
U12b LTV-847
U12c LTV-847
U12d LTV-847
U12e LTV-847
U12f LTV-847
U12g LTV-847
U12h LTV-847
T1 BC847CDW
D20 TS4148RY
D21 TS4148RY
VDAC-MOSI
VDAC-SCK
VDAC-CS1
VDAC-LATCH
CTRL-MOSI
CTRL-SCK
CTRL-CS1
CV-OUT1
CV-OUT2
VFILTERS
V1
V2
FX-INSERT
SUM-RIGHT
SUM-LEFT
+3V3
+2.7V
-2.7V
+12V
-12V
GND

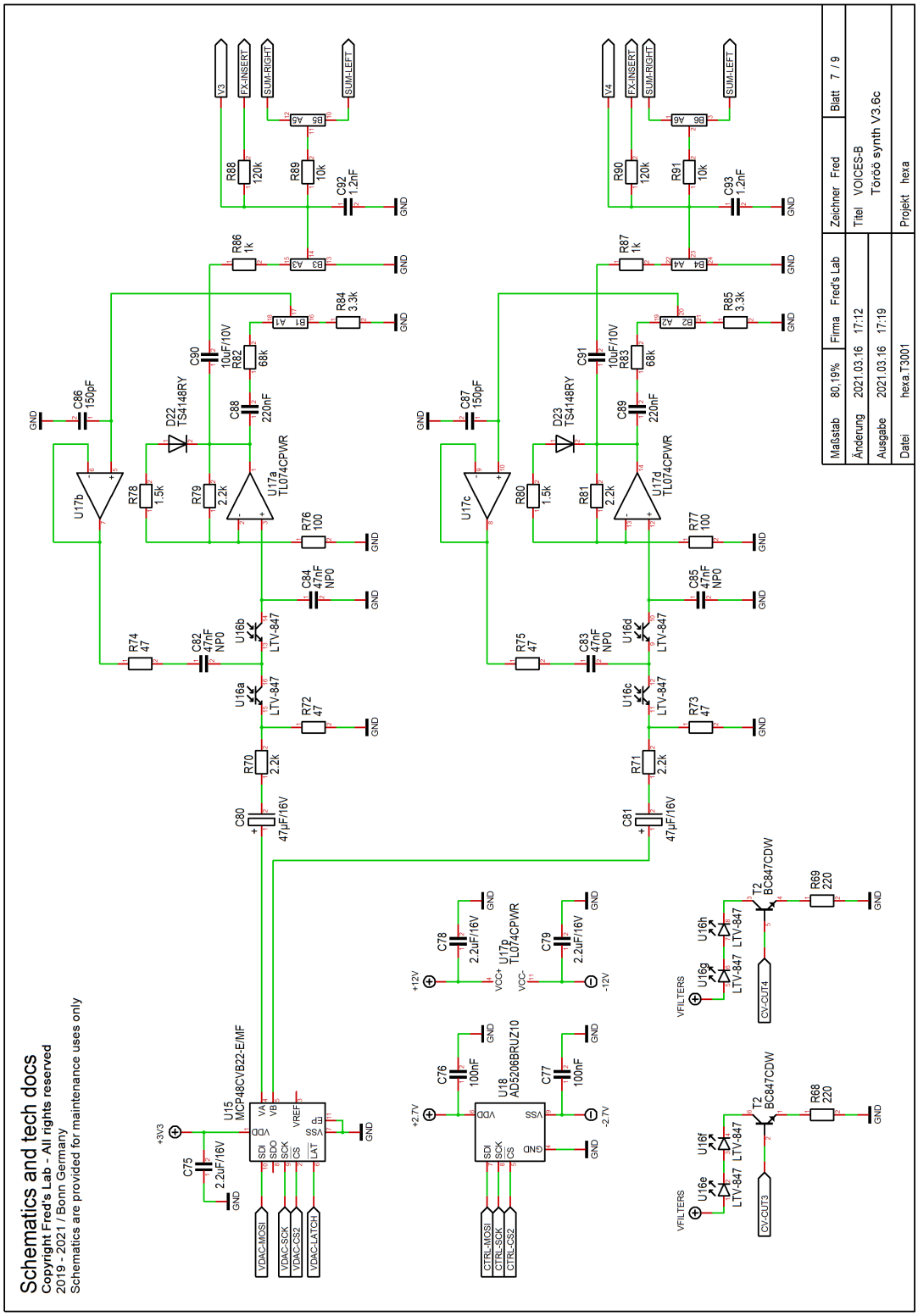
Schematics and tech docs
Copyright Fred's Lab - All rights reserved
2019 - 2021 / Bonn Germany
Schematics are provided for maintenance uses only
Maßstab 80,19%
Firma Fred's Lab
Zeichner Fred
Blatt 7 / 9
Änderung 2021.03.16 17:12
Titel VOICES-B
Töröö synth V3.6c
Ausgabe 2021.03.16 17:19
Datei hexa.T3001
Projekt hexa
U15 MCP48CVB22-E/MF
U16a LTV-847
U16b LTV-847
U16c LTV-847
U16d LTV-847
U16e LTV-847
U16f LTV-847
U16g LTV-847
U16h LTV-847
U17a TL074CPWR
U17b
U17c
U17d TL074CPWR
U17p TL074CPWR
U18 AD3206BRUZ10
T2 BC847CDW
D22 TS4148RY
D23 TS4148RY
VDAC-MOSI
VDAC-SCK
VDAC-CS2
VDAC-LATCH
CTRL-MOSI
CTRL-SCK
CTRL-CS2
CV-OUT3
CV-OUT4
VFILTERS
FX-INSERT
SUM-RIGHT
SUM-LEFT
V3
V4
+3V3
+12V
-12V
+2.7V
-2.7V
GND

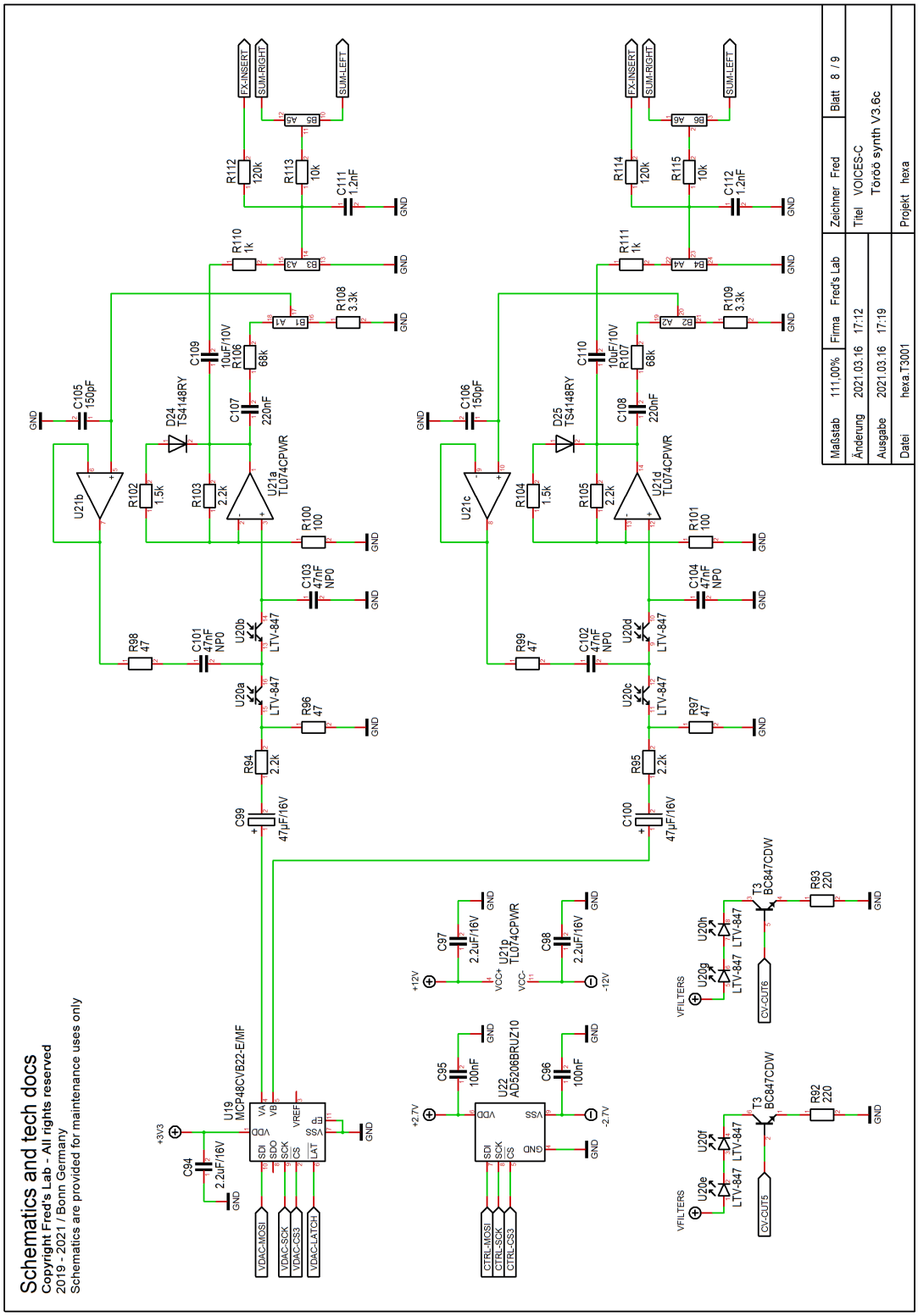
Schematics and tech docs
Copyright Fred's Lab - All rights reserved
2019 - 2021 / Bonn Germany
Schematics are provided for maintenance uses only
Maßstab 111,00% Firma Fred's Lab Zeichner Fred Blatt 8 / 9
Änderung 2021.03.16 17:12 Titel VOICES-C
Ausgabe 2021.03.16 17:19 Töröö synth V3.6c
Datei hexa.T3001 Projekt hexa
U19 MCP48CVB22-E/MF
U22 AD5206BRUZ10
U21p TL074CPWR
U21a TL074CPWR
U21d TL074CPWR
U21b
U21c
U20a LTV-847
U20b LTV-847
U20c LTV-847
U20d LTV-847
U20e LTV-847
U20f LTV-847
U20g LTV-847
U20h LTV-847
T3 BC847CDW
D24 TS4148RY
D25 TS4148RY
VDAC-MOSI
VDAC-SCK
VDAC-CS3
VDAC-LATCH
CTRL-MOSI
CTRL-SCK
CTRL-CS3
CV-OUT5
CV-OUT6
VFILTERS
FX-INSERT
SUM-RIGHT
SUM-LEFT
+3V3
+2.7V
+12V
-2.7V
-12V
GND

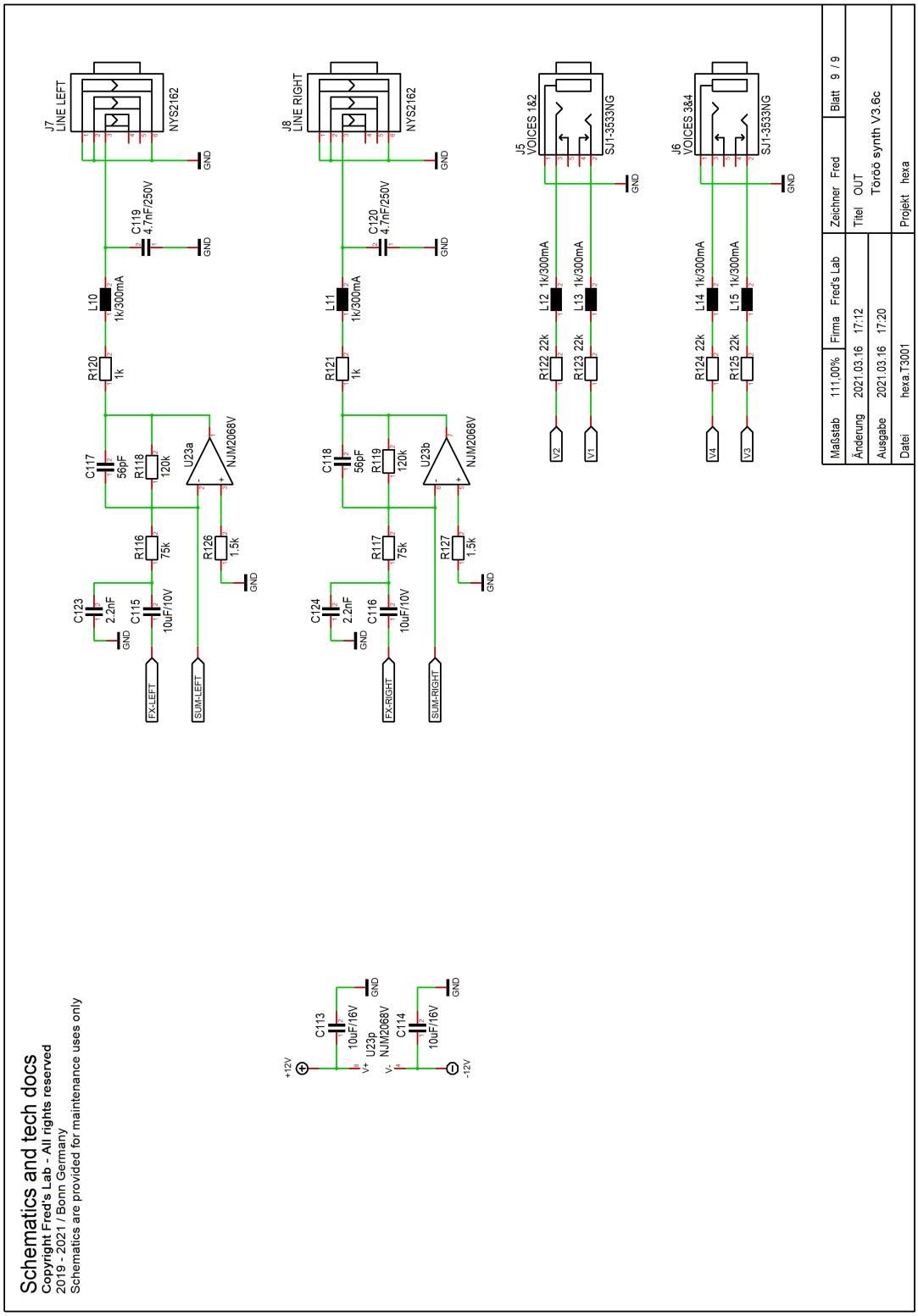
Schematics and tech docs
Copyright Fred's Lab - All rights reserved
2019 - 2021 / Bonn Germany
Schematics are provided for maintenance uses only
J7
LINE LEFT
NYS2162
J8
LINE RIGHT
NYS2162
J5
VOICES 1&2
SJ1-3533NG
J6
VOICES 3&4
SJ1-3533NG
C119
4.7nF/250V
C120
4.7nF/250V
L10
1k/300mA
L11
1k/300mA
L12 1k/300mA
L13 1k/300mA
L14 1k/300mA
L15 1k/300mA
R120
1k
R121
1k
R122 22k
R123 22k
R124 22k
R125 22k
C117
56pF
C118
56pF
R118
120k
R119
120k
U23a
U23b
NJM2068V
R116
75k
R117
75k
R126
1.5k
R127
1.5k
C123
2.2nF
C124
2.2nF
C115
10uF/10V
C116
10uF/10V
FX-LEFT
SUM-LEFT
FX-RIGHT
SUM-RIGHT
V2
V1
V4
V3
GND
+12V
-12V
C113
10uF/16V
C114
10uF/16V
U23p
NJM2068V
V+
V-
Maßstab 111,00%
Firma Fred's Lab
Zeichner Fred
Blatt 9 / 9
Änderung 2021.03.16 17:12
Titel OUT
Ausgabe 2021.03.16 17:20
Töröö synth V3.6c
Datei hexa.T3001
Projekt hexa

14 Norms

14.1 Europe: CE

CE DECLARATION OF CONFORMITY

1. Product unique identification:

Töörö analog and digital sound module
Belonging to the category "multimedia electronic equipment"

2. Address of the manufacturer and his authorized representative:

Frédéric Meslin Audiogeräte
Herwarthstraße, 20
53115 Bonn, Germany
Email: fred@fredslab.net
Telephone: +49 228 53451657 (office hours)

3. Object of the declaration:

This equipment **conforms to the following requirements:**

- EN 55032:2015 (emission), EN 55035:2017 (immunity)
- EN 61000-4-2:2009 (ESD)
- EN 61000-4-3:2006 + A1:2008 + A2:2010 (immunity)
- EN 61000-4-8:2010 (immunity)
- EN 61000-6-3 (interference)
- 2011/65/EU (ROHS 2), 2012/19/EU (WEEE)

After examinations conducted by the independent laboratory:
Transferstelle für Elektromagnetische Verträglichkeit
Hochschule Koblenz
Konrad-Zuse Straße 1
56075 Koblenz, Germany
Report: EMC Testreport 1290 / 2020 (22 July 2020)

4. Signed for and on behalf of **Frédéric Meslin Audiogeräte**:

Frédéric Meslin, Lead Engineer of Fred's Lab
Bonn, the 22/07/2020

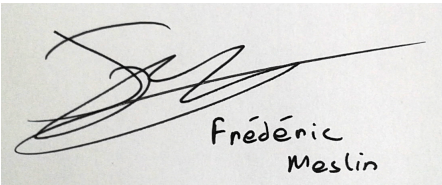

14.2 Canada: Interference Regulation

This device does not exceed the Class B limits for radio noise emissions from digital apparatus set out in the radio interference regulation of the Canadian Department of Communications.

Cet équipement n'émet pas de bruits radiofréquence dépassant les limites applicables aux appareils numériques de la Classe B prescrites dans le règlement sur les interférences radio-électriques édicté par le Ministère Des Communications du Canada.

14.3 USA: FCC Information

This equipment has been verified to comply with the limits for a class B computing device, pursuant to FCC Rules. In order to maintain compliance with FCC regulations, shielded cables must be used with this equipment. Operation with non-approved equipment or unshielded cables is likely to result in interference to radio and TV reception.

Important: Changes and modifications made to the equipment without the approval of the manufacturer can void your authority to operate this equipment.

Note: This equipment has been tested and found to comply with the limits for a Class B digital device, pursuant to part 15 of the FCC Rules. These limits are designed to provide reasonable protection against harmful interference in a residential installation. This equipment generates, uses and can radiate radio frequency energy and, if not installed and used in accordance with the instructions, may cause harmful interference to radio communications.

However, there is no guarantee that interference will not occur in a particular installation. If this equipment does cause harmful interference to radio or television reception, which can be determined by turning the equipment off and on, the user is encouraged to try to correct the interference by one or more of the following measures:

- Reorient or relocate the receiving antenna
- Increase the separation between the equipment and receiver
- Connect the equipment into an outlet on a circuit different from that to which the receiver is connected
- Consult the dealer or an experienced radio/TV technician for help